Figure 14. STM32F10xxx microcontroller reference schematic

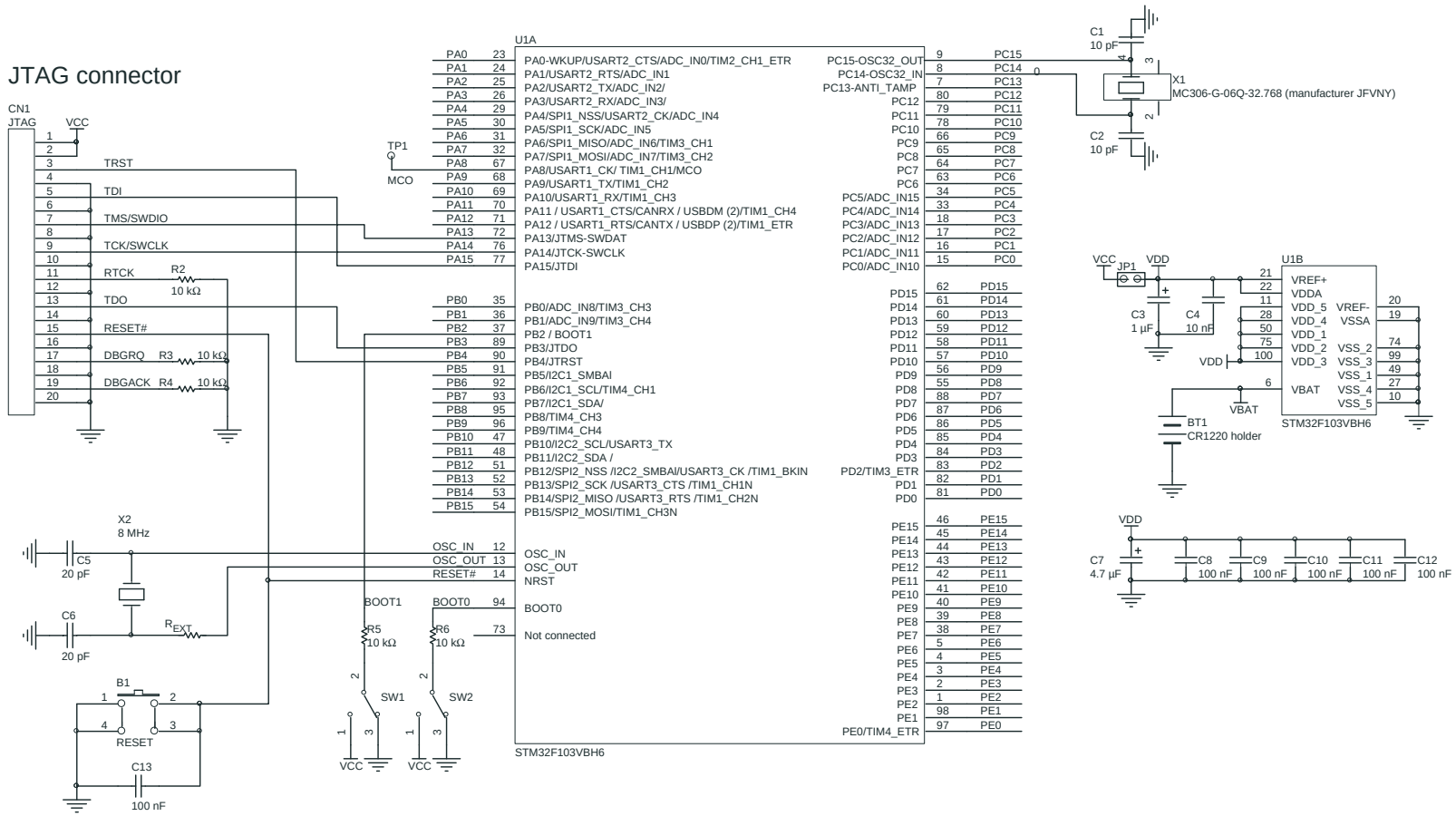

Notes:
- Capacitors (C3,C4,C7-12) should be placed on the PCB tracks closest to the VDD, VDDA and GND pins of the Microcontrollers
- VCC: mains power supply: the range is between 2.0 and 3.6 Volts (see Section 1 Power supplies)
- The value of R_{EXT} depends on the crystal characteristics. Typical value is in the range of 5 to 6 R_S (resonator series resistance) as indicated in Section 2.1.