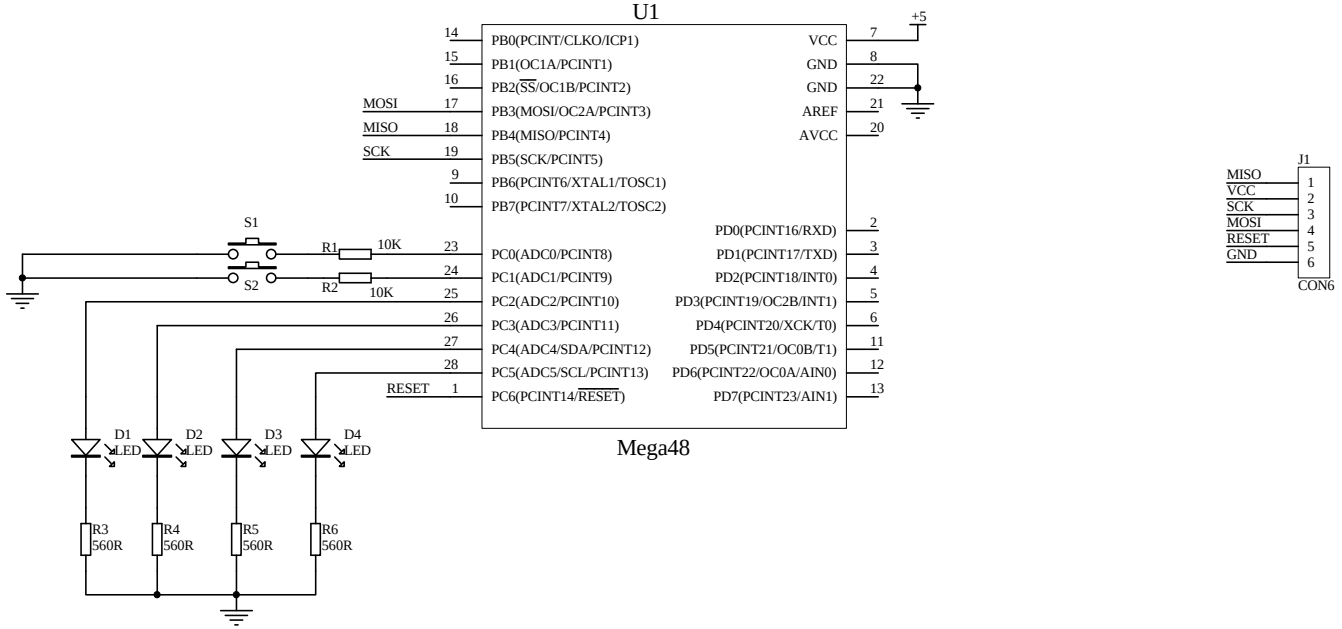

Title		
Size A4	Number	Revision
Date: 6-Dec-2007	Sheet of	
File: C:\Documents and Settings\gzrddm\Desktop\Drawn Folder\跑马灯.DDB		