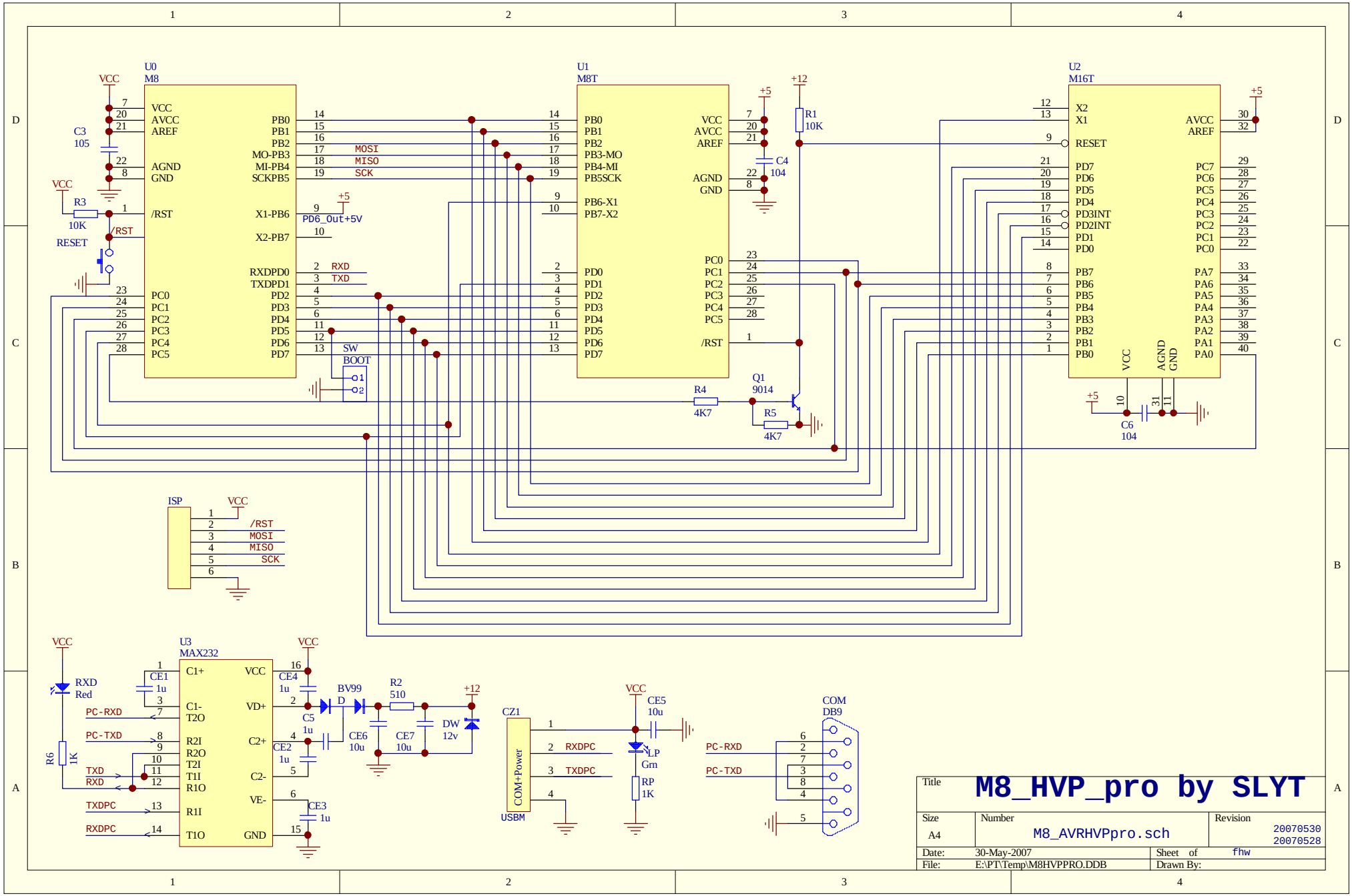

Title	M8_HVP_pro by SLYT	
Size A4	Number M8_AVRHVPpro.sch	Revision 20070530 20070528
Date: 30-May-2007		Sheet of fhw
File: E:\PT\Temp\M8HVPPRO.DDB		Drawn By: