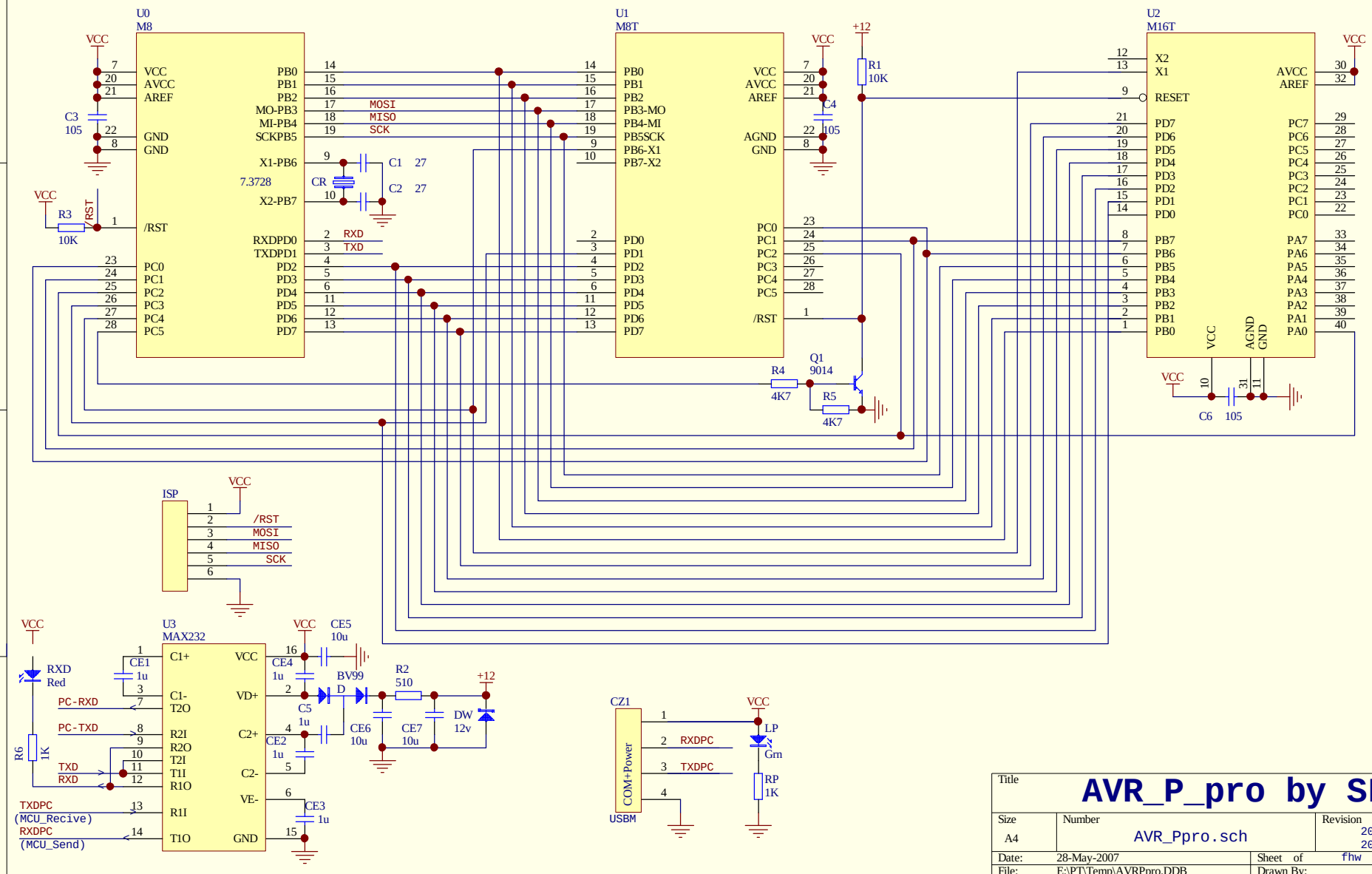

Title	**AVR_P_pro by SLYT**		
Size A4	Number AVR_Ppro.sch		Revision 20070322 20070528
Date: 28-May-2007		Sheet of fhw	
File: E:\PT\Temp\AVRPpro.DDB		Drawn By:	