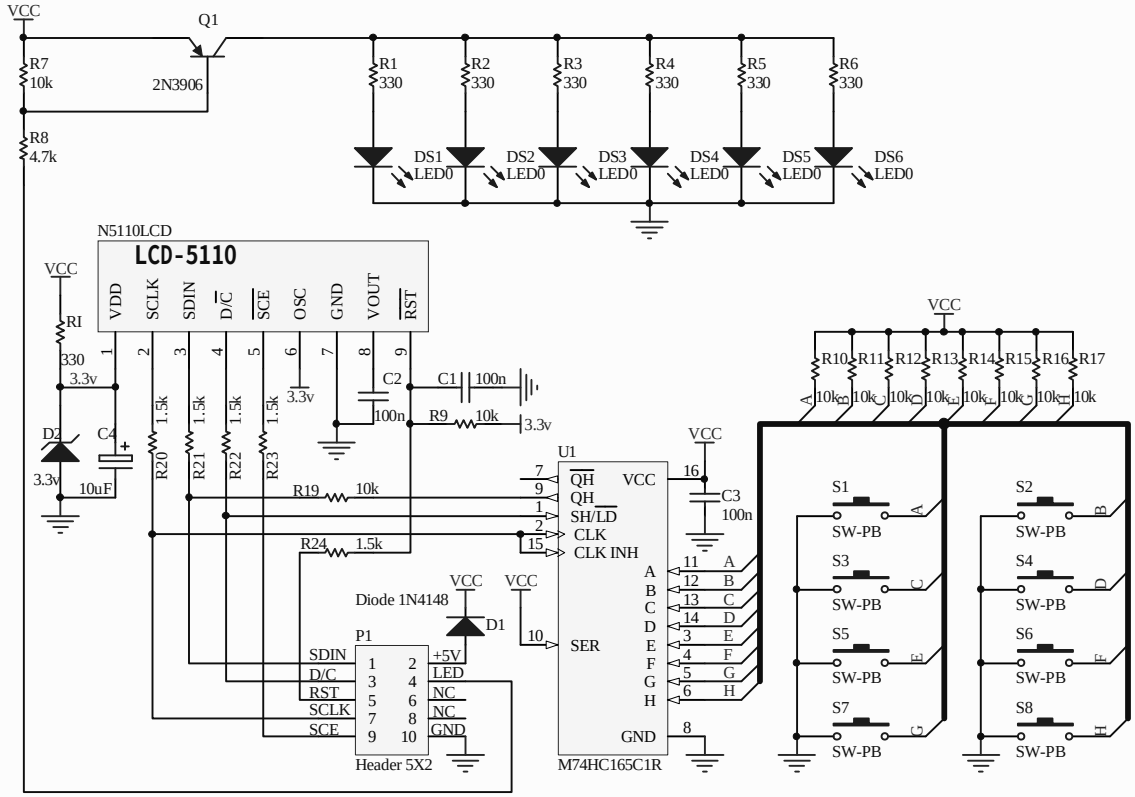


| | | |
|---|---|---|
| Title: N5110LCD+8KEY | | |
| Number: | (c) agui2008 | |
| Date: 2006/02/12 | Sheet: 1 of 1 | |
| File: D:\proteldxp2004_agui\n5110lcd+8key | Size: A4 | Rev: 1.1 |

Basicavr

http://www.basicavr.com