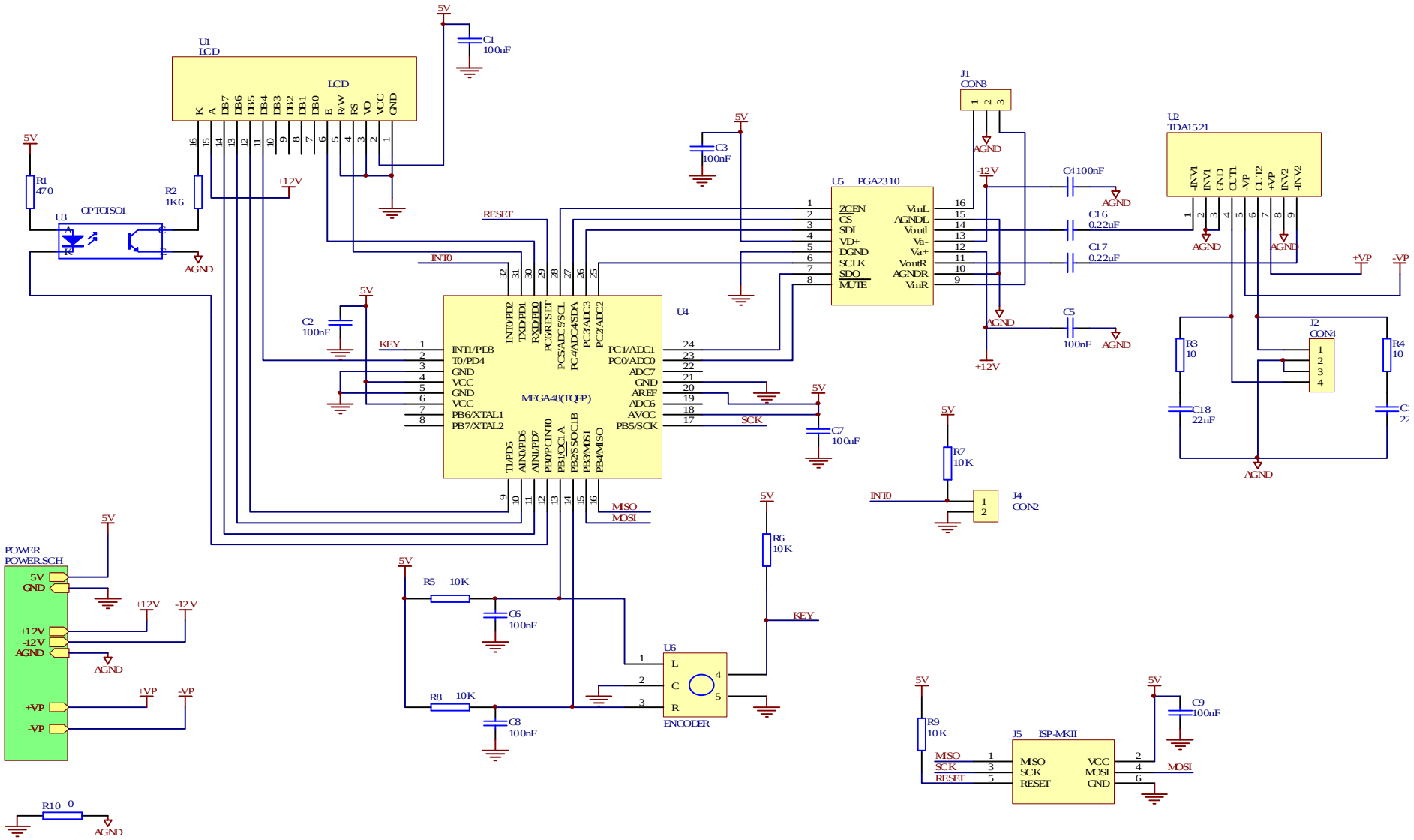
U1
LCD
LCD
K A DB7 DB6 DB5 DB4 DB3 DB2 DB1 DB0 E R/W RS VO VCC GND
C1
100nF
5V
R1
470
R2
1K6
+12V
U3
OPTOISO1
AGND
RESET
INT0
C2
100nF
KEY
U4
INT1/PD3
T0/PD4
GND
VCC
GND
VCC
PB6/XTAL1
PB7/XTAL2
MEGA48(TQFP)
PC1/ADC1
PC0/ADC0
ADC7
GND
AREF
ADC6
AVCC
PB5/SCK
SCK
MISO
MOSI
C7
100nF
C3
100nF
U5
PGA2310
ZCEN
CS
SDI
VD+
DGND
SCLK
SDO
MUTE
VinL
AGNDL
Voutl
Va-
Va+
VoutR
AGNDR
VinR
-12V
J1
CON3
C4 100nF
C16
0.22uF
C17
0.22uF
C5
100nF
U2
TDA1521
-INV1
INV1
GND
OUT1
-VP
OUT2
+VP
INV2
-INV2
+VP
-VP
J2
CON4
R3
10
R4
10
C18
22nF
R7
10K
J4
CON2
POWER
POWER.SCH
5V
GND
+12V
-12V
AGND
+VP
-VP
R5 10K
C6
100nF
R8 10K
C8
100nF
U6
L
C
R
ENCODER
R6
10K
R9
10K
J5 ISP-MKII
MISO
SCK
RESET
VCC
MOSI
GND
C9
100nF
R10 0