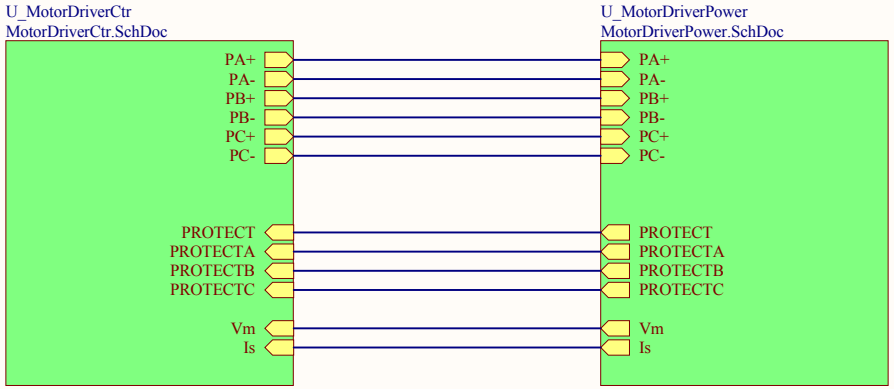

Title		
Size A4	Number	Revision
Date: 2011-9-25		Sheet of
File: E:\workspace\M\MoterDriverTop.SchDoc		Drawn By:

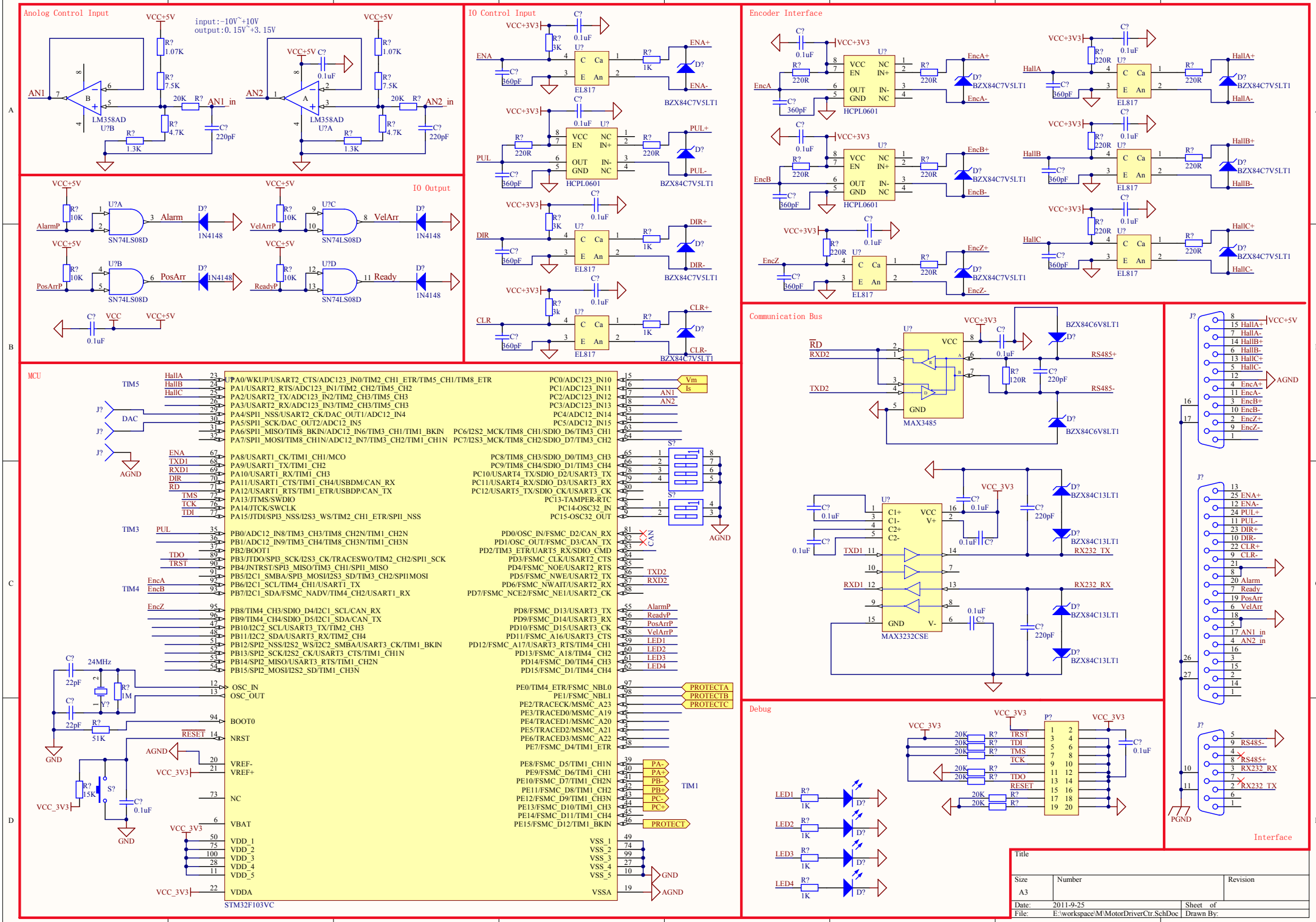
Anolog Control Input
input:-10V~+10V
output:0.15V~+3.15V
LM358AD
U?B
U?A
AN1_in
AN2_in
IO Output
SN74LS08D
1N4148
Alarm
VelArr
PosArr
Ready
IO Control Input
EL817
HCPL0601
BZX84C7V5LT1
ENA+
ENA-
PUL+
PUL-
DIR+
DIR-
CLR+
CLR-
Encoder Interface
EncA+
EncA-
EncB+
EncB-
EncZ+
EncZ-
HallA+
HallA-
HallB+
HallB-
HallC+
HallC-
Communication Bus
MAX3485
BZX84C6V8LT1
RS485+
RS485-
MAX3232CSE
BZX84C13LT1
RX232_TX
RX232_RX
Debug
LED1
LED2
LED3
LED4
Interface
MCU
STM32F103VC
TIM5
TIM3
TIM4
TIM1
DAC
CAN
PROTECTA
PROTECTB
PROTECTC
PROTECT
24MHz
Title
Size
A3
Number
Revision
Date: 2011-9-25
Sheet of
File: E:\workspace\M\MotorDriverCtr.SchDoc
Drawn By:

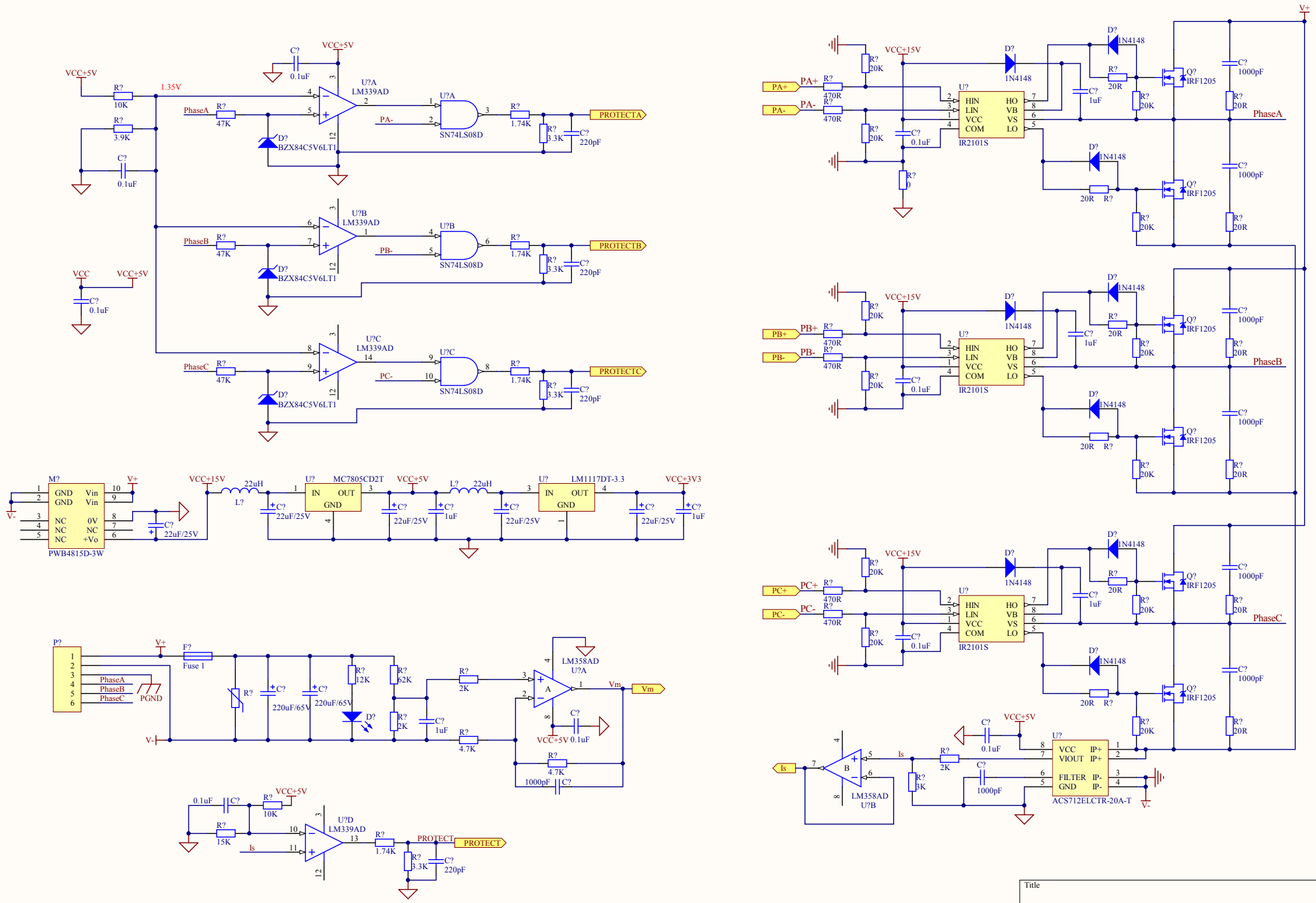

Title		
Size A3	Number	Revision
Date: 2011-9-25		Sheet of
File: E:\workspace\M\MotorDriverPower.SchDoc		Drawn By:

Comment	Description	Designator	Footprint	LibRef	Quantity
Cap	Capacitor	C?	2012[0805]	Cap	9
Cap	Capacitor	C?	RAD-0.3	Cap	53
Cap Pol2	Polarized Capacitor (Axial)	C?	POLAR0.8	Cap Pol2	9
1N4148	High Conductance Fast Diode	D?	DO-35	1N4148	13
BZX84C5V6LT1	Zener Voltage Regulator Diode	D?	318-07	BZX84C5V6LT1	3
BZX84C6V8LT1	Zener Voltage Regulator Diode	D?	318-07	BZX84C6V8LT1	2
BZX84C7V5LT1	Zener Voltage Regulator Diode	D?	318-07	BZX84C7V5LT1	10
BZX84C13LT1	Zener Voltage Regulator Diode	D?	318-07	BZX84C13LT1	4
LED1	Typical RED GaAs LED	D?	LED-1	LED1	1
LED2	Typical RED, GREEN, YELLOW, AMBER GaAs LED	D?	2012[0805]	LED2	4
Fuse 1	Fuse	F?	PIN-W2/E2.8	Fuse 1	1
D Connector 9	Receptacle Assembly, 9 Position, Right Angle	J?	DSUB1.385-2H9	D Connector 9	1
D Connector 15	Receptacle Assembly, 15 Position, Right Angle	J?	DSUB1.385-2H15	D Connector 15	1
D Connector 25	Receptacle Assembly, 25 Position, Right Angle	J?	DSUB1.385-2H25A	D Connector 25	1
Socket	Socket	J?	PIN1	Socket	3
Inductor	Inductor	L?	INDC1005AL	Inductor	2
PWB4815D-3W		M?		PWB4815D-3W	1
Header 10X2	Header, 10-Pin, Dual row	P?	HDR2X10	Header 10X2	1
MHDR1X6	Header, 6-Pin	P?	MHDR1X6	MHDR1X6	1
IRF1205	HEXFET Power MOSFET	Q?	TO-220AB	IRF1010E	6
Res Varistor	Varistor (Voltage-Sensitive Resistor)	R?	RESC2012N	Res Varistor	1
Res2	Resistor	R?	AXIAL-0.4	Res2	89
Res2	Resistor	R?	RESC2012N	Res2	14
SW DIP-2	DIP Switch, 2 Position, SPST	S?	DIP-4	SW DIP-2	1
SW DIP-4	DIP Switch, 4 Position, SPST	S?	SOIC127P600-8N	SW DIP-4	1
SW-PB	Switch	S?	SPST-2	SW-PB	1
ACS712ELCTR-20A-T		U?		ACS712	1
EL817		U?		EL817	7
HCPL0601		U?	SO-8	6N137	3
IR2101S	High and Low Side Driver	U?	SO-8_N	IR2101S	3
LM339AD	Quad Single-Supply Comparator	U?	751A-02_N	LM339AD	4
LM358AD	Low-Power Dual Operational Amplifier	U?	SO8_N	LM358AD	4
LM1117DT-3.3	800mA Low-Dropout Linear Regulator	U?	TD03B_N	LM1117DT-3.3	1
MAX3232CSE	3.0V TO 5.5V, Low-Power, up to 1Mbps, True RS-232 Transceiver Using Four 0.1µF External Capacitor	U?	NSO16_N	MAX3232CSE	1
MAX3485	Low-Power, Slew-Rate-Limited RS-485/RS-422 Transceiver	U?	NSO8_N	MAX485ESA	1
MC7805CD2T	Three-Terminal Positive Voltage Regulator	U?	936-03	MC7805CD2T	1
SN74LS08D	Quad 2-Input AND Gate	U?	751A-03_N	SN74LS08D	3
SN74LS08D	Quadruple 2-Input Positive-AND Gate	U?	D014_N	SN74LS08D	4
STM32F103VC		U?	LQFP100_M	STM32F103VC	1
XTAL	Crystal Oscillator	Y?	RAD-0.2	XTAL	1