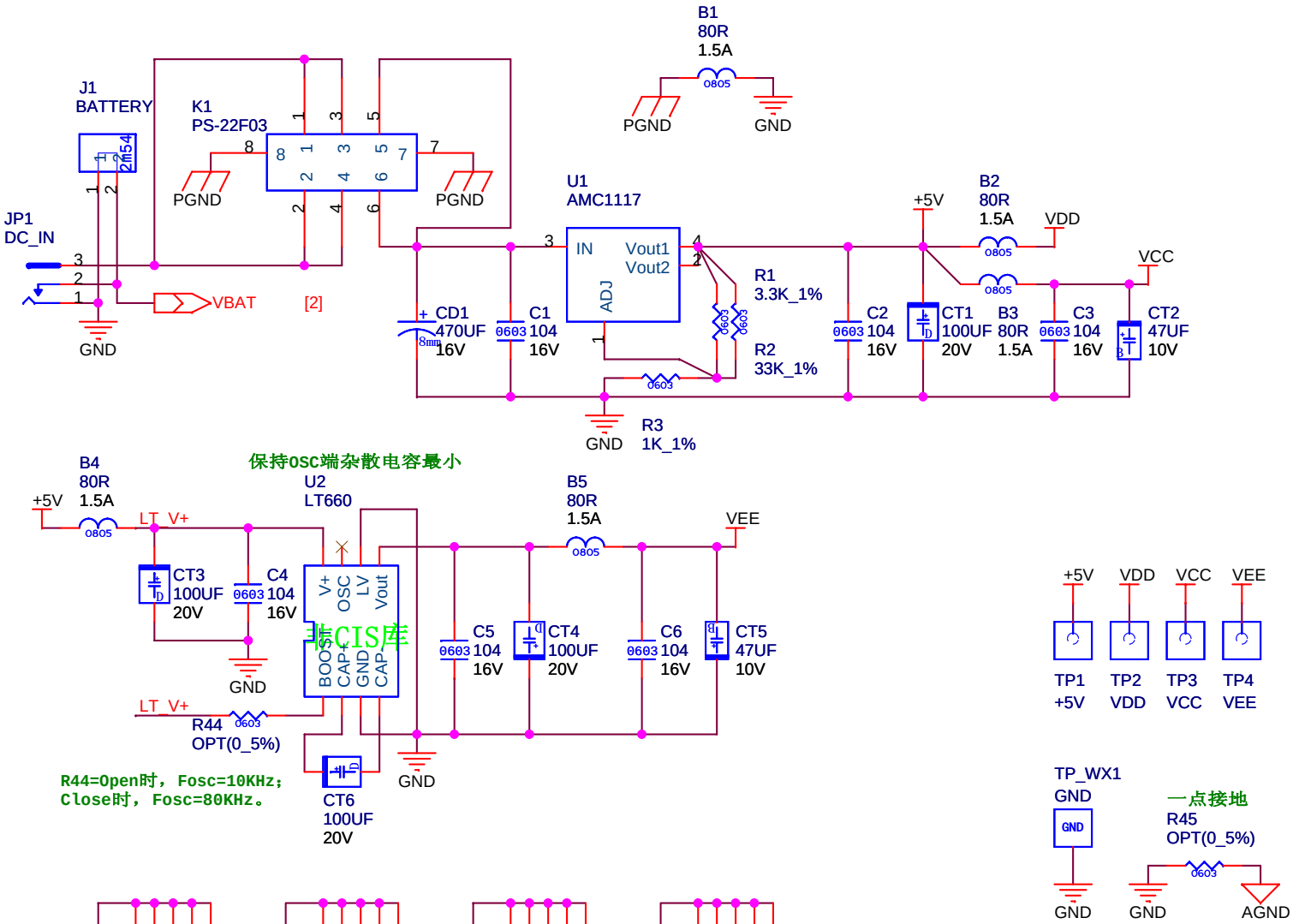

北CIS库

Title	<Title>	
Size A	Document Number <Doc>	Rev <RevCode>
Date: Thursday, April 14, 2011	Sheet 1 of 7	

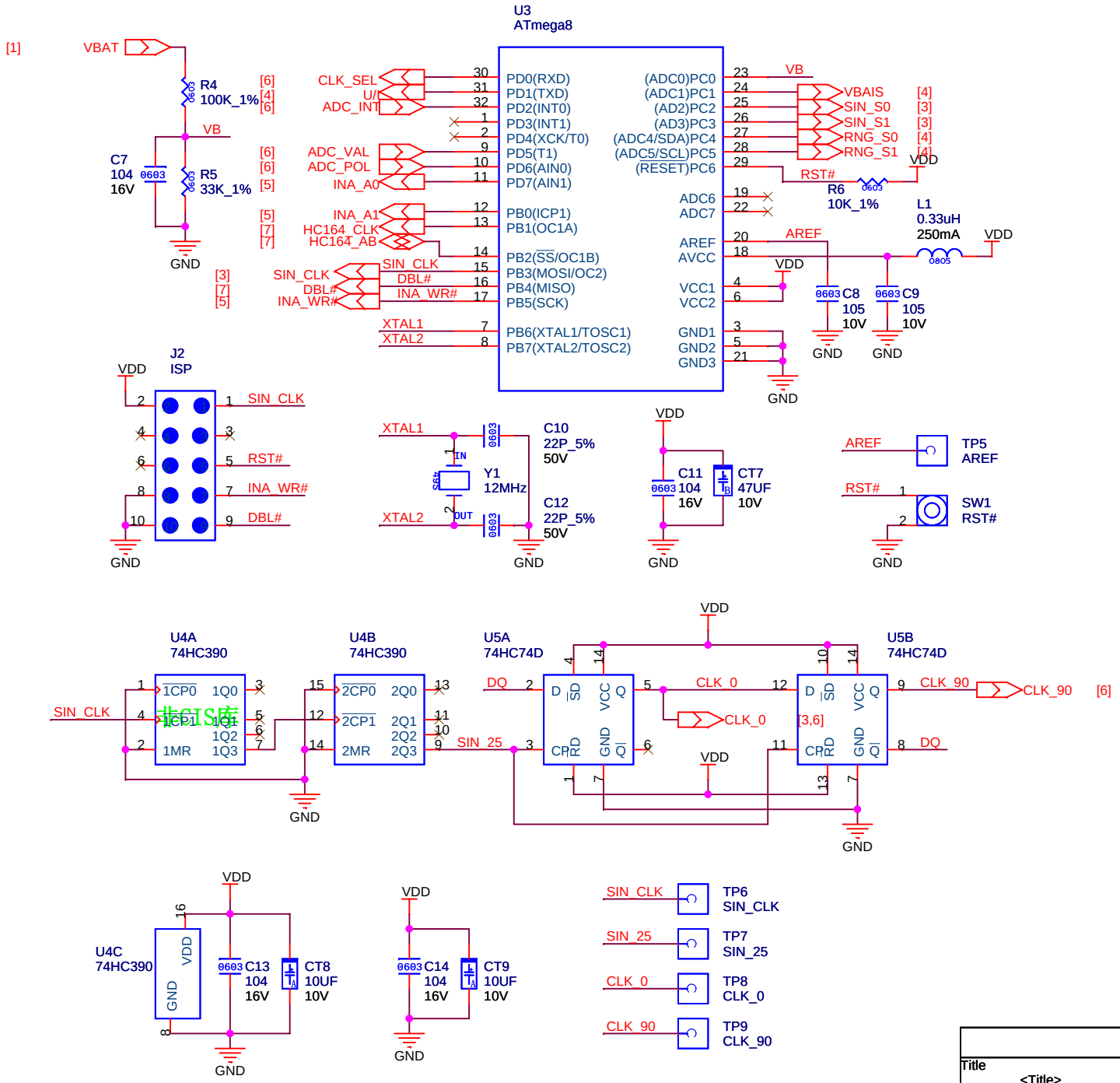

Title	<Title>	
Size A4	Document Number <Doc>	Rev <RevCo
Date: Thursday, April 14, 2011	Sheet 2 of 7	

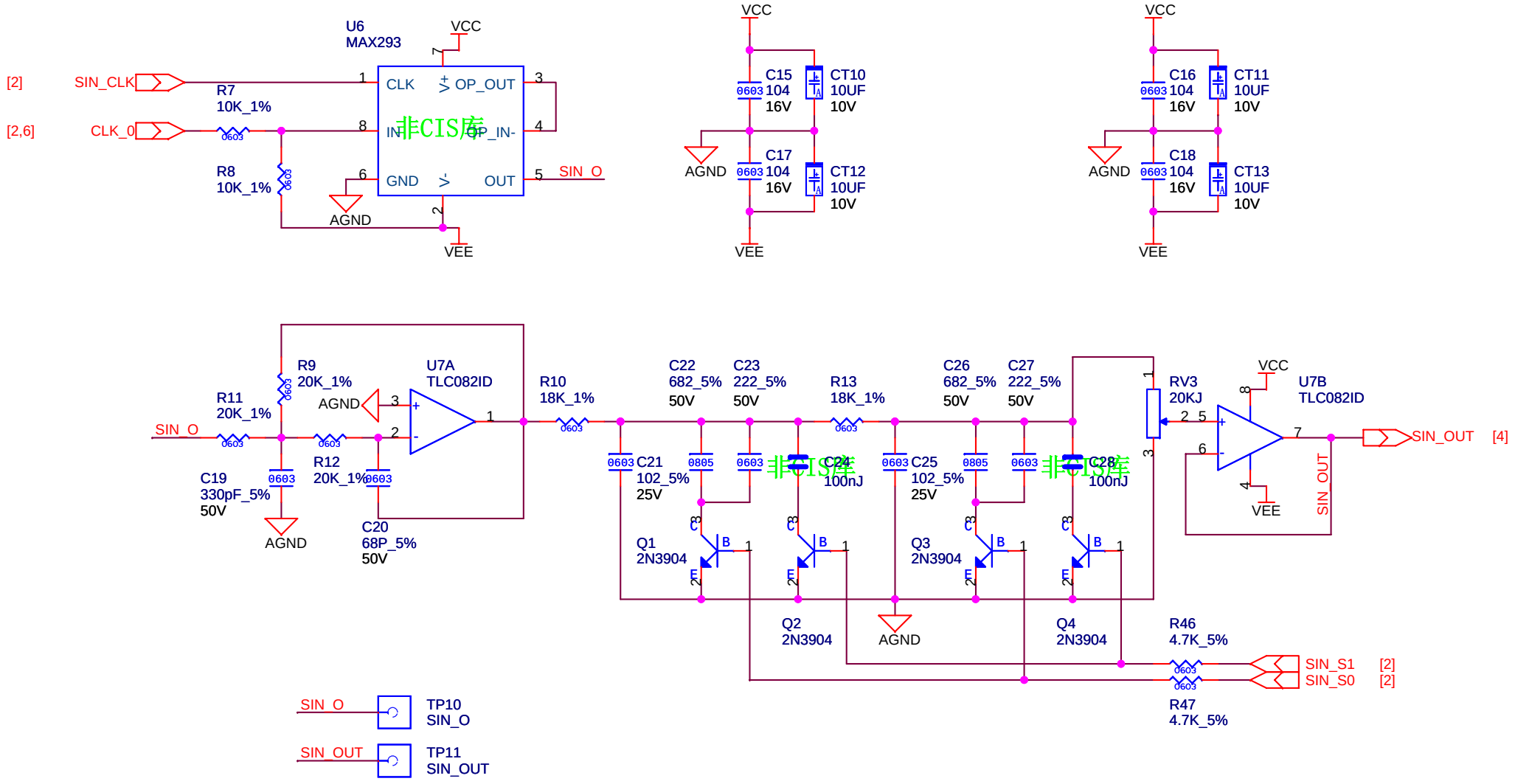

Title	<Title>	
Size A	Document Number <Doc>	Rev <RevCode>
Date: Thursday, April 14, 2011	Sheet 3 of 7	

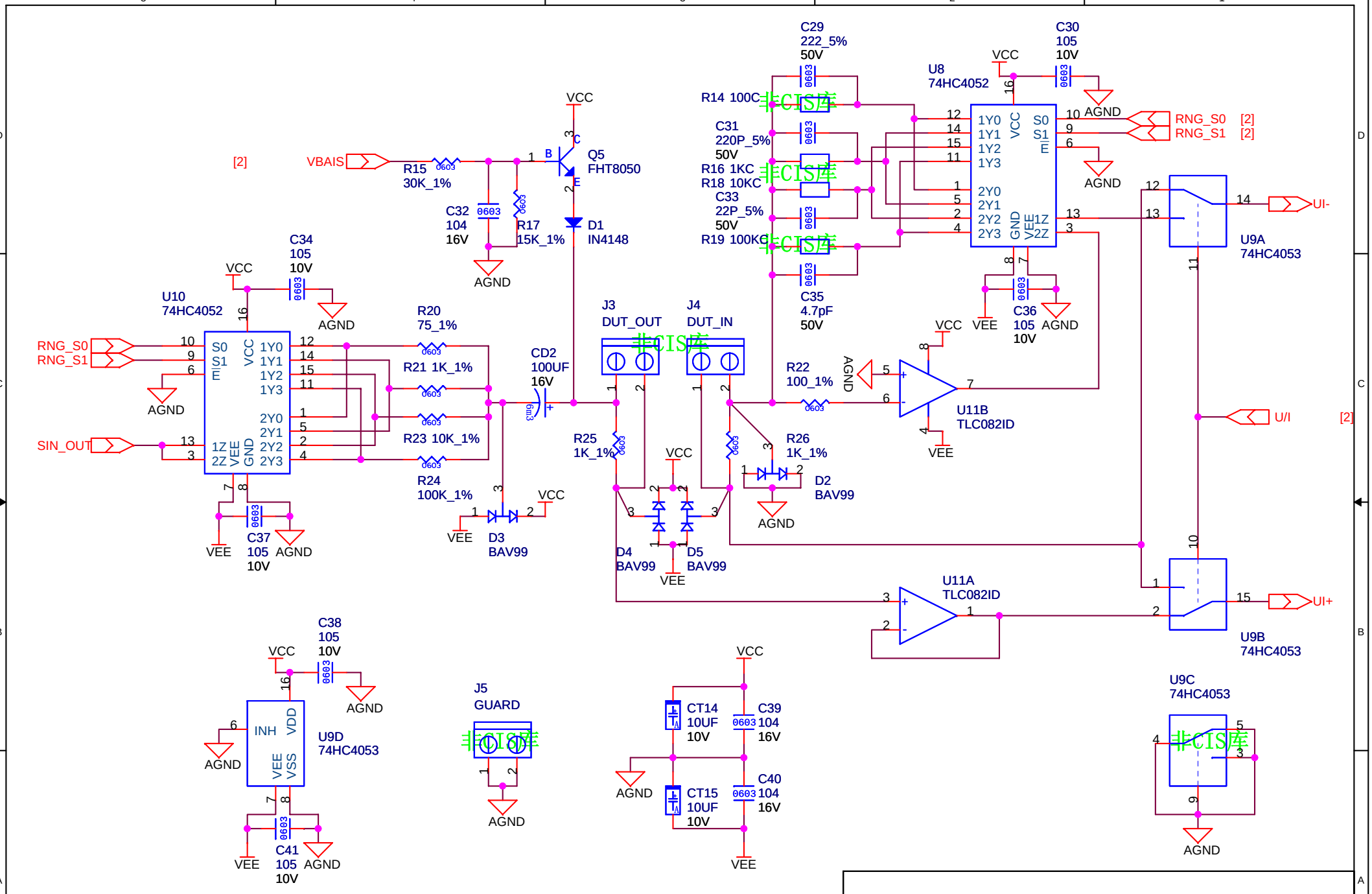

Title	<Title>	
Size A	Document Number <Doc>	Rev <RevCode>
Date: Thursday, April 14, 2011	Sheet 4 of 7	

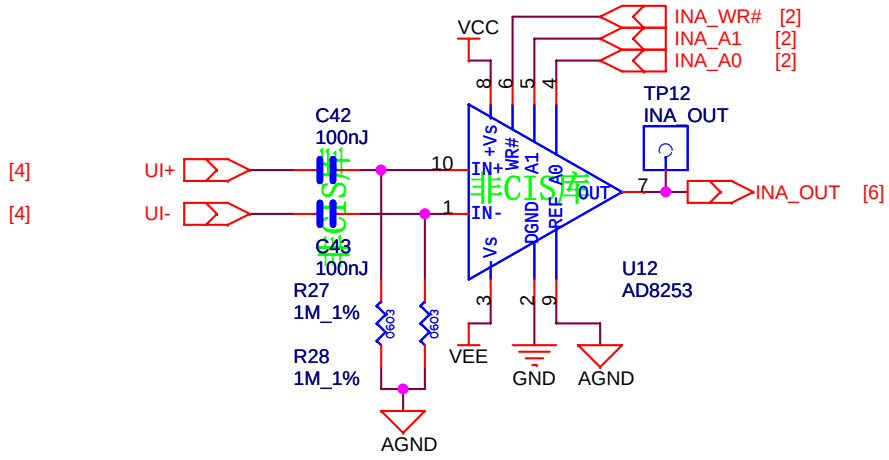

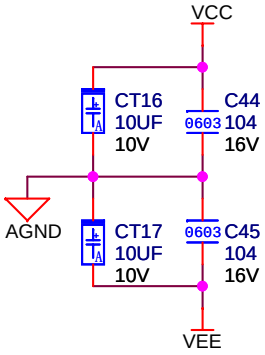

Title <Title>		
Size A	Document Number <Doc>	Rev <RevCode>
Date: Thursday, April 14, 2011	Sheet 5 of 7	

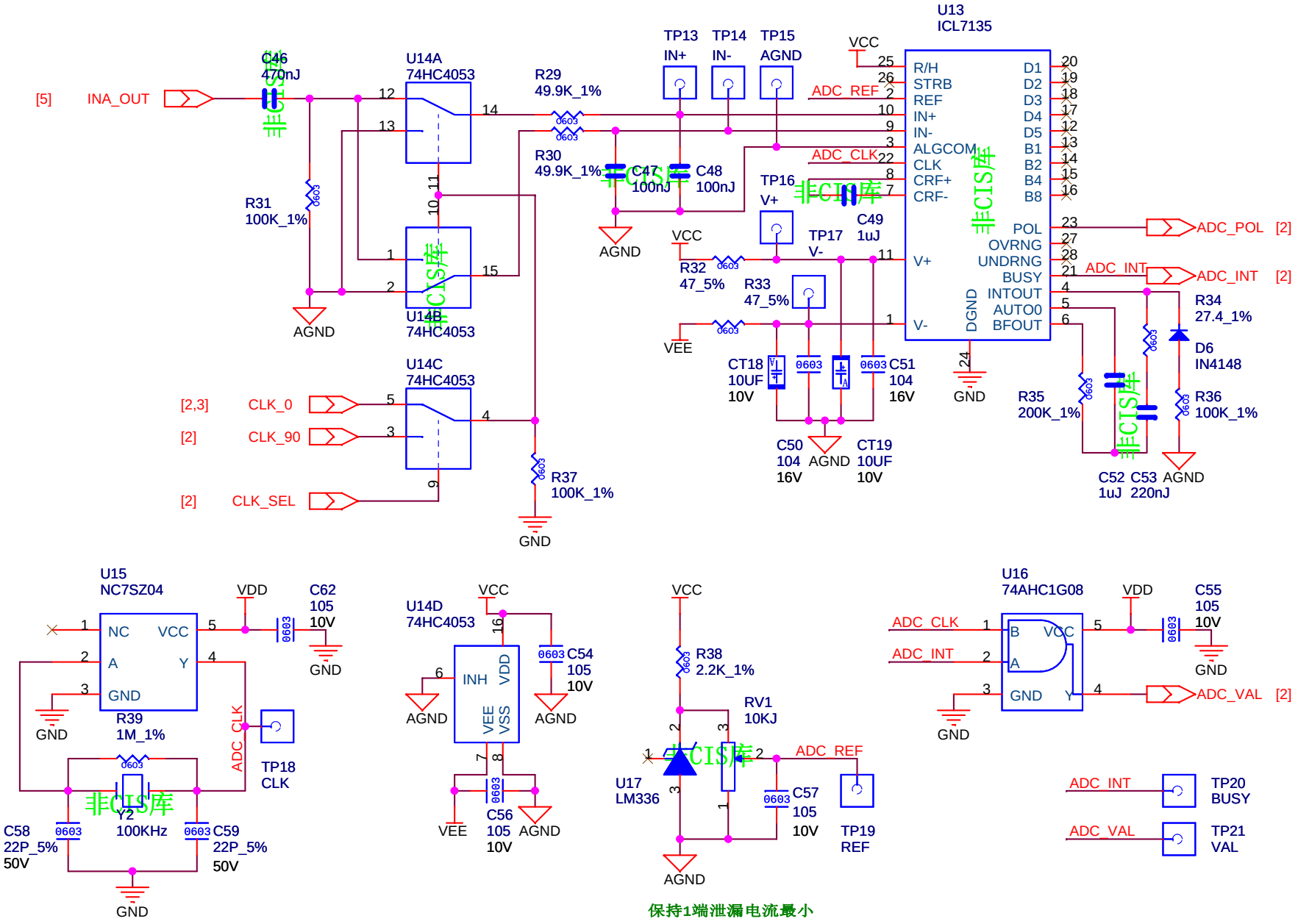

Title	<Title>	
Size A	Document Number <Doc>	Rev <RevCode>
Date: Thursday, April 14, 2011	Sheet 6 of 7	

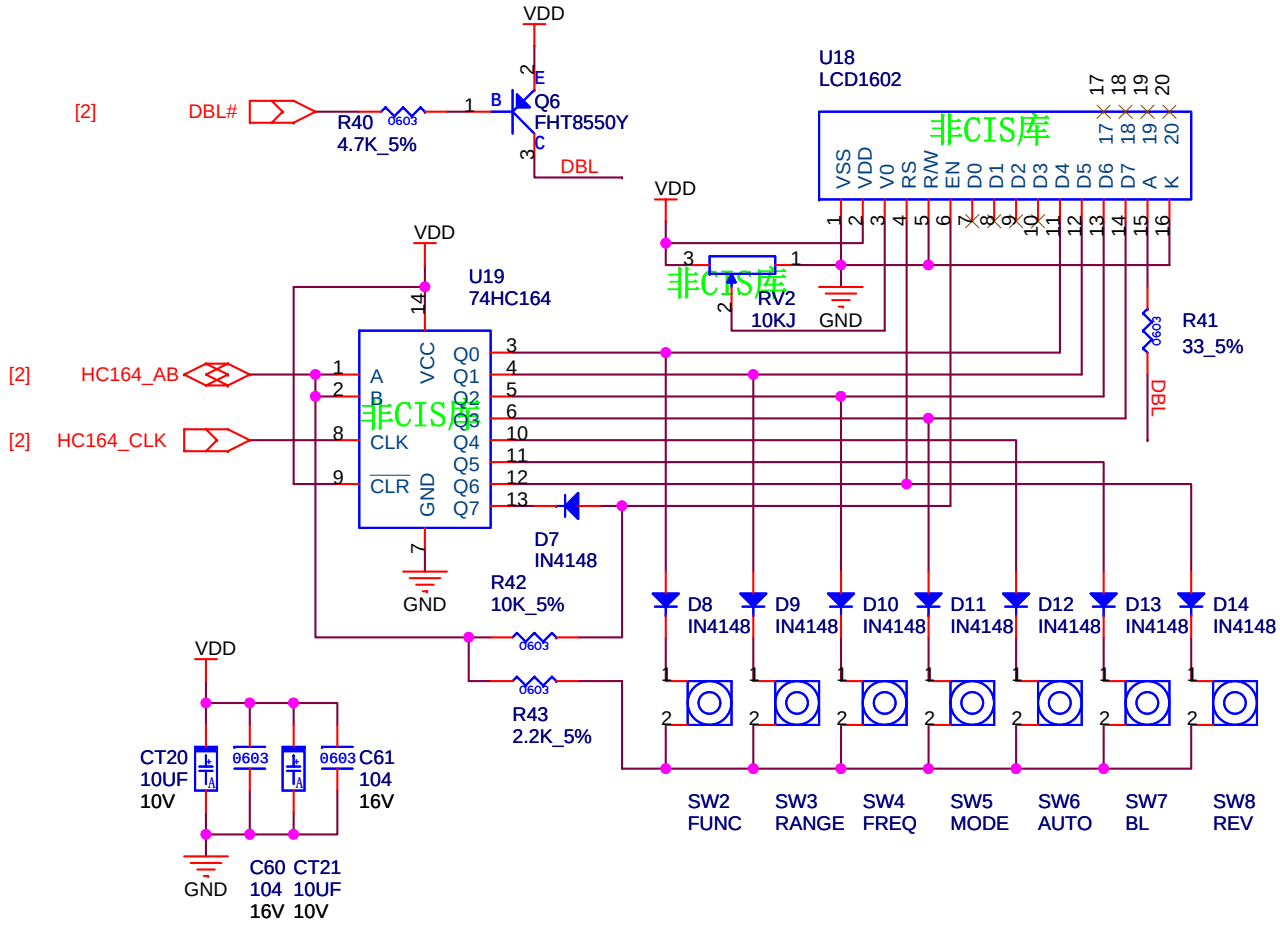

Title	<Title>	
Size A	Document Number <Doc>	Rev <RevCode>
Date: Thursday, April 14, 2011	Sheet 7 of 7	