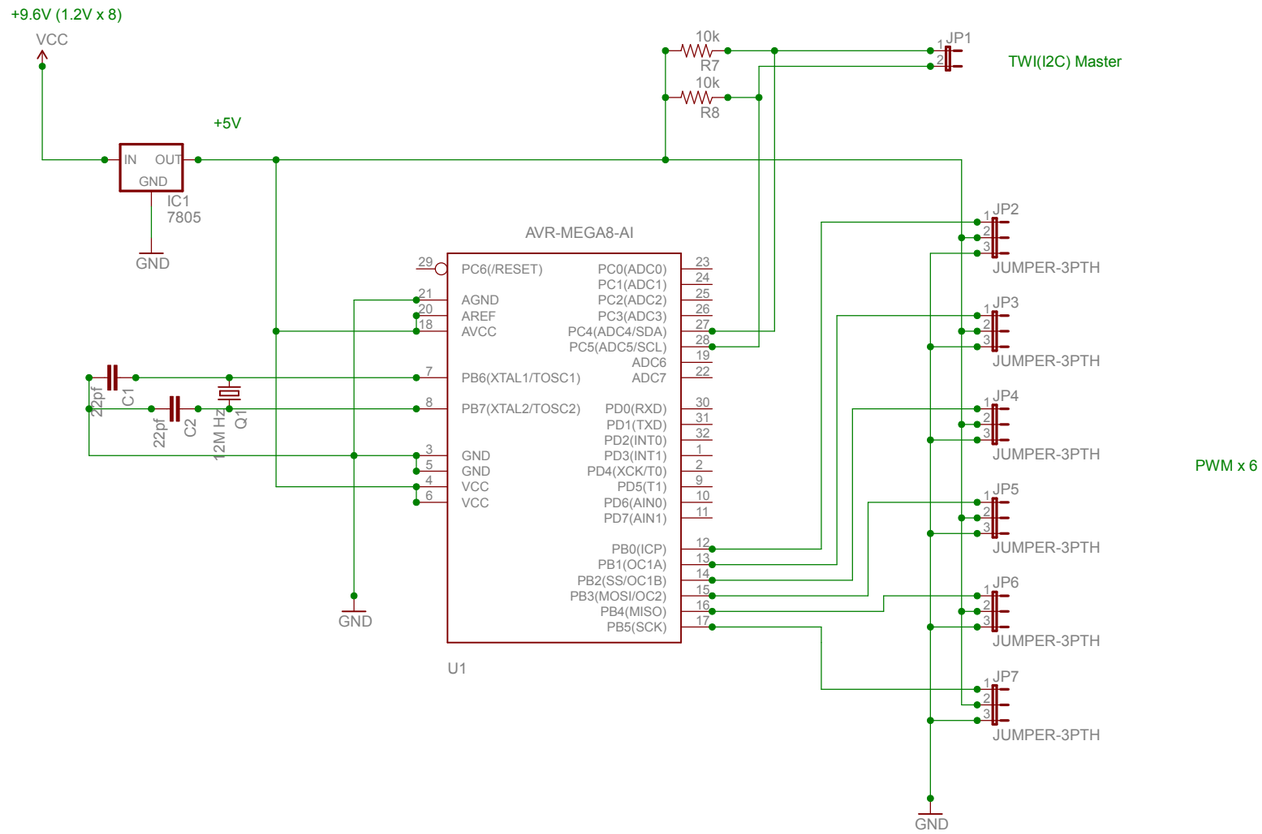

TITLE: Reciver_Control	
Document Number:	REV:
Date: 2011/1/14	Sheet: 1/1