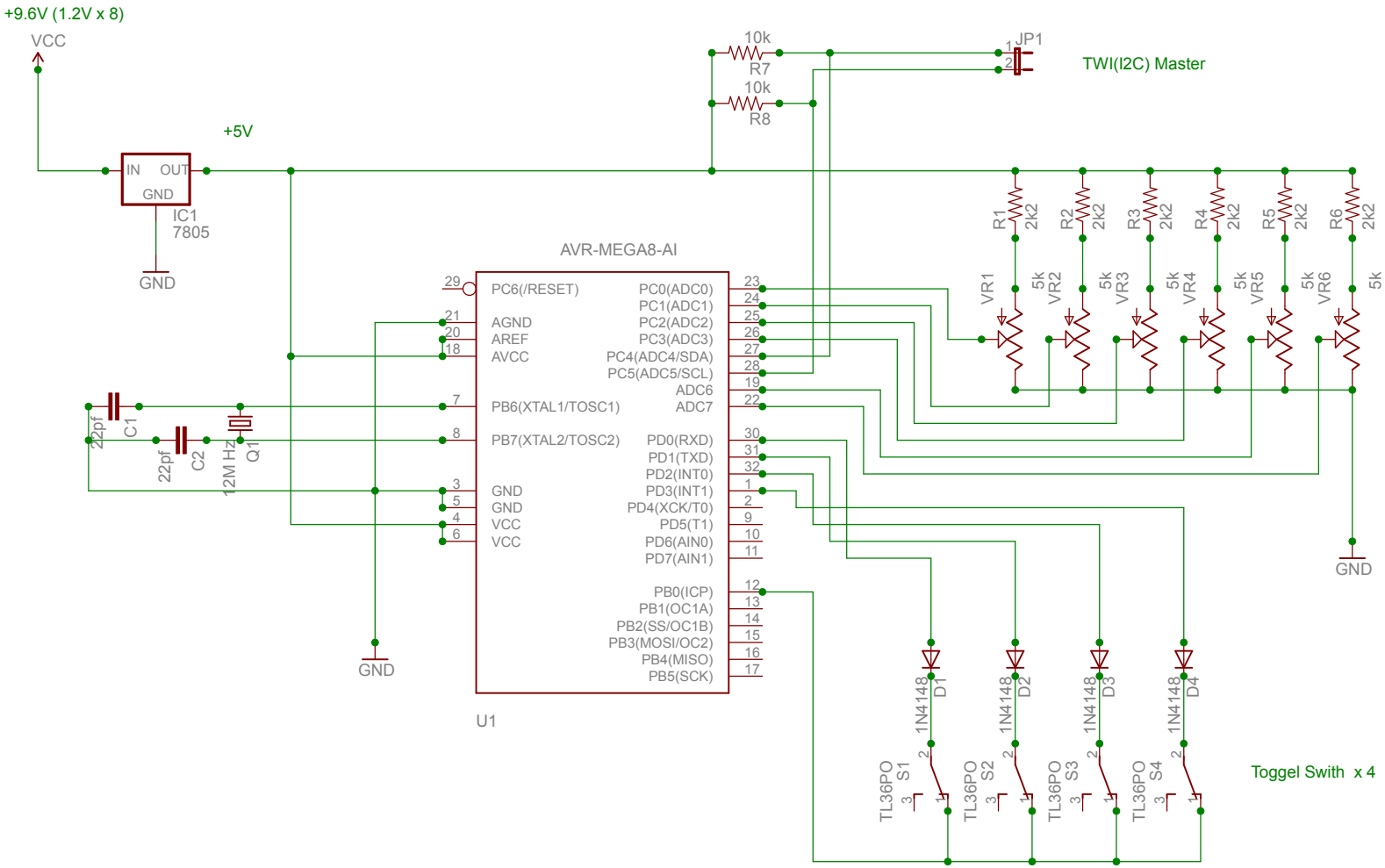

TITLE: Transmitter_Control	
Document Number:	REV:
Date: 2010/12/18	Sheet: 1/1