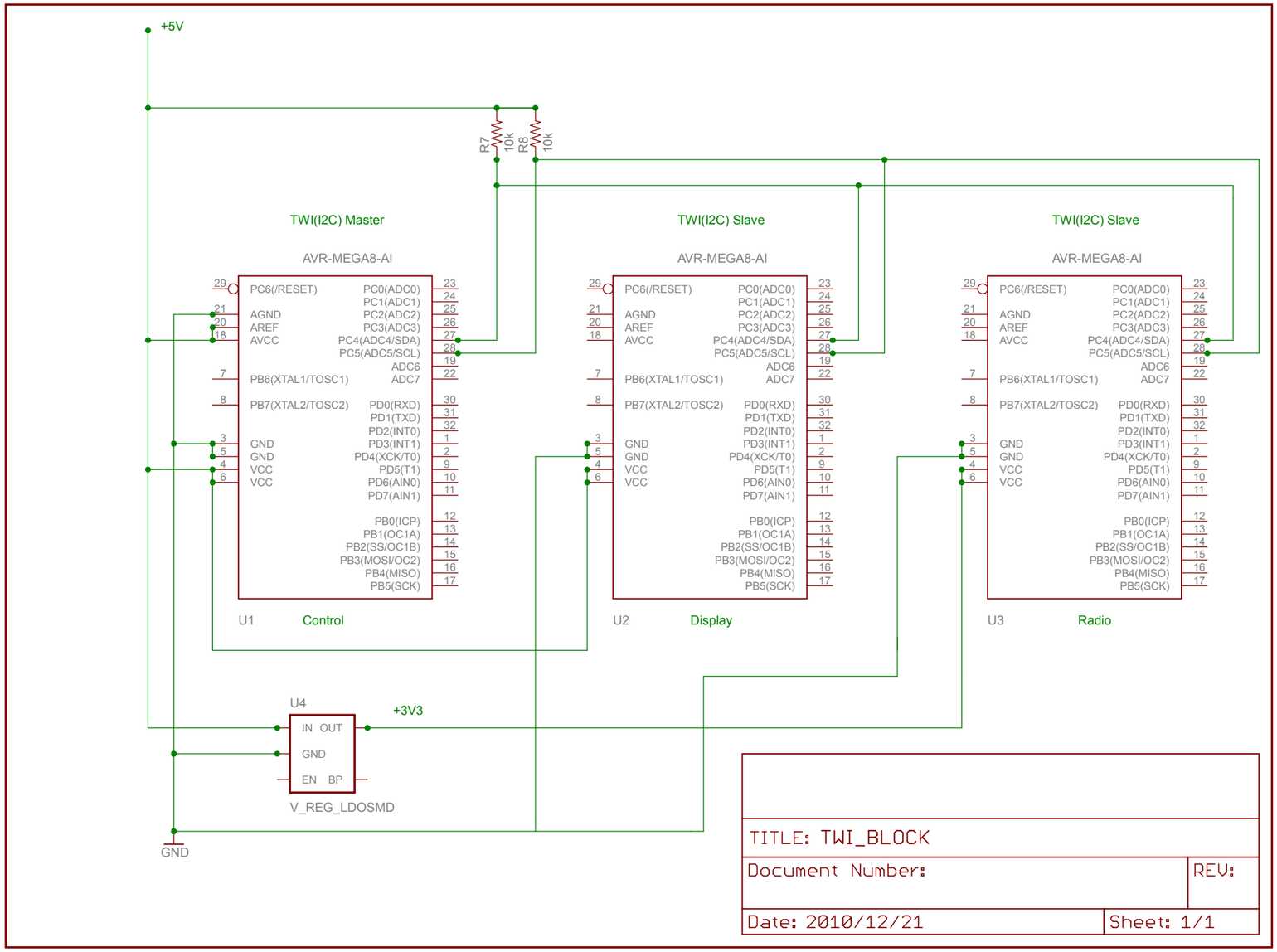

TITLE: TWI_BLOCK

Document Number:

REV:

Date: 2010/12/21

Sheet: 1/1