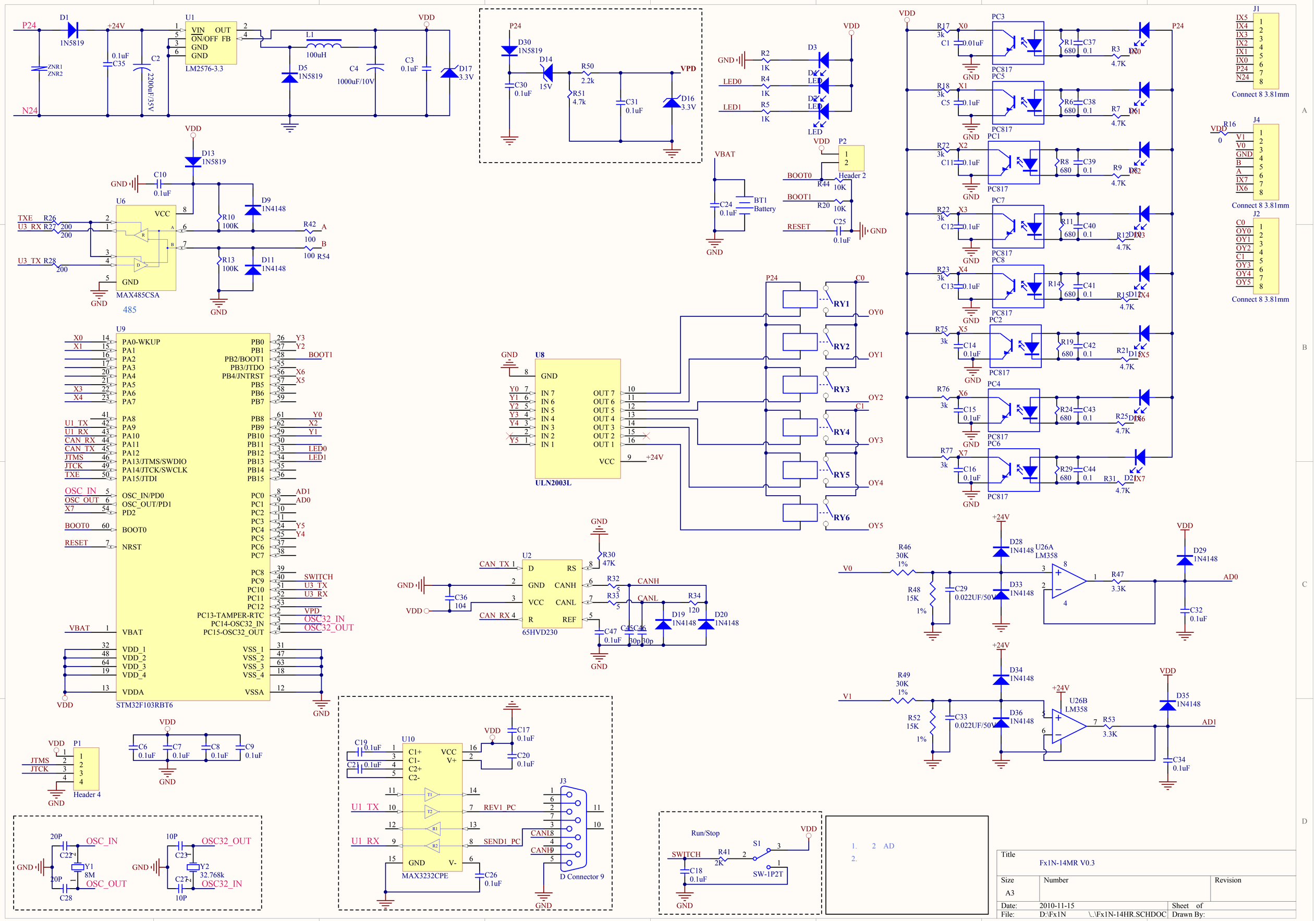

1. 2 AD
2.

Title	Fx1N-14MR V0.3	
Size A3	Number	Revision
Date: 2010-11-15		Sheet of
File: D:\Fx1N \..\Fx1N-14HR.SCHDOC		Drawn By: