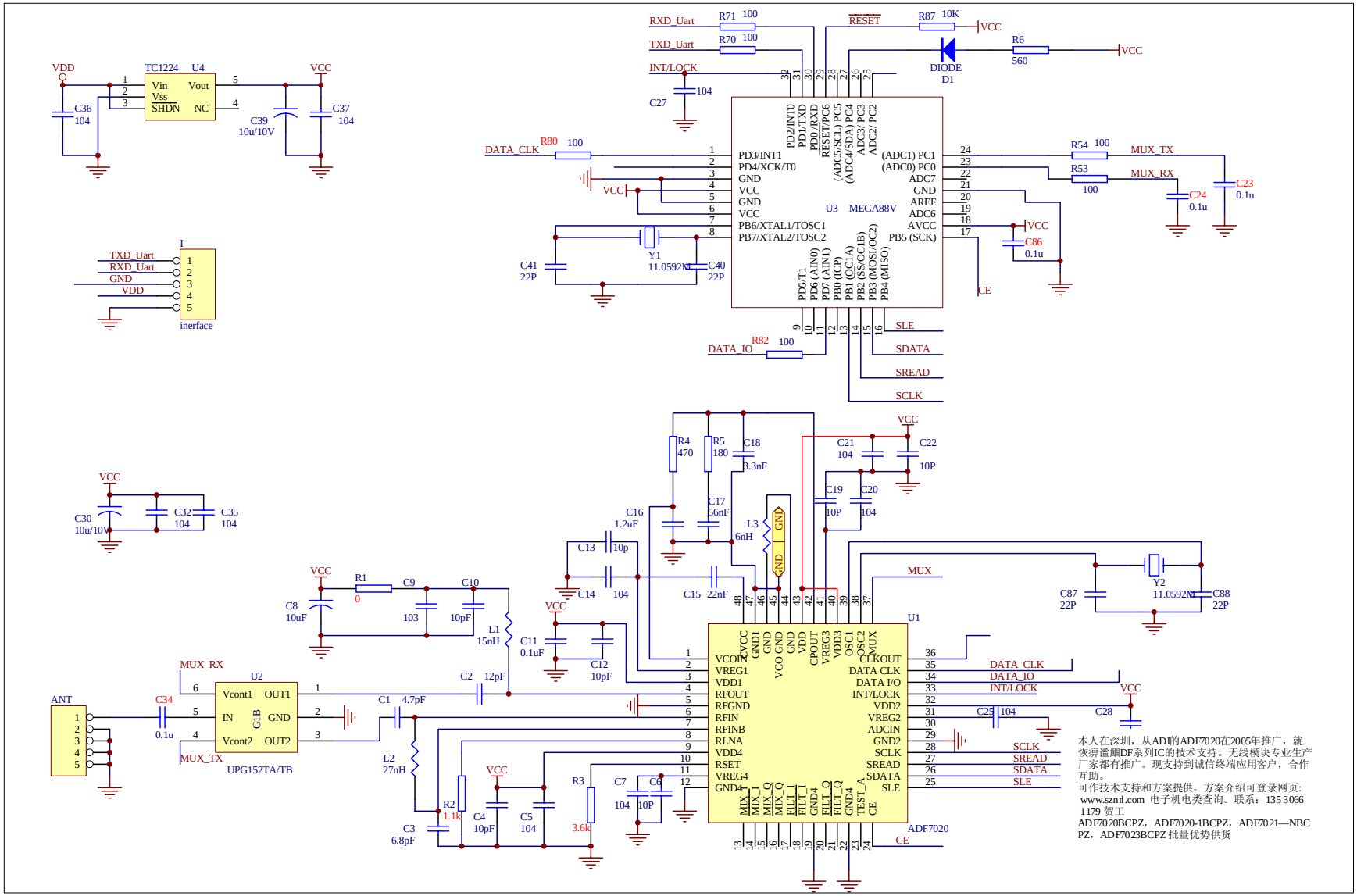
VDD
TC1224 U4
Vin Vout
Vss
SHDN NC
VCC
C36 104
C39 10u/10V
C37 104
RXD_Uart R71 100
TXD_Uart R70 100
INT/LOCK
RESET R87 10K
VCC
DIODE D1
R6 560
C27 104
DATA_CLK R80 100
PD3/INT1
PD4/XCK/T0
GND
VCC
GND
VCC
PB6/XTAL1/TOSC1
PB7/XTAL2/TOSC2
U3 MEGA88V
(ADC1) PC1
(ADC0) PC0
ADC7
GND
AREF
ADC6
AVCC
PB5 (SCK)
R54 100
R53 100
MUX_TX
MUX_RX
C23 0.1u
C24 0.1u
C86 0.1u
Y1 11.0592M
C41 22P
C40 22P
CE
SLE
SDATA
SREAD
SCLK
DATA_IO R82 100
TXD_Uart
RXD_Uart
GND
VDD
I
inerface
R4 470
R5 180
C18 3.3nF
C17 56nF
C16 1.2nF
L3 6nH
C21 104
C22 10P
C19 10P
C20 104
C13 10p
C14 104
C15 22nF
MUX
C87 22P
Y2 11.0592M
C88 22P
C30 10u/10V
C32 104
C35 104
R1 0
C9 103
C10 10pF
C8 10uF
L1 15nH
C11 0.1uF
C12 10pF
U1
VCOIN
VREG1
VDD1
RFOUT
RFGND
RFIN
RFINB
RLNA
VDD4
RSET
VREG4
GND4
CLKOUT
DATA CLK
DATA I/O
INT/LOCK
VDD2
VREG2
ADCIN
GND2
SCLK
SREAD
SDATA
SLE
ADF7020
CE
C25 104
C28
MUX_RX
U2
Vcont1 OUT1
IN GIB GND
Vcont2 OUT2
MUX_TX
UPG152TA/TB
ANT
C34 0.1u
C2 12pF
C1 4.7pF
L2 27nH
R2 1.1k
C3 6.8pF
C4 10pF
C5 104
R3 3.6k
C7 104
C6 10P
本人在深圳，从ADI的ADF7020在2005年推广，就恢弊滥鲷DF系列IC的技术支持。无线模块专业生产厂家都有推广。现支持到诚信终端应用客户，合作互助。
可作技术支持和方案提供。方案介绍可登录网页：www.sznd.com 电子机电类查询。联系：135 3066 1179 贺工
ADF7020BCPZ，ADF7020-1BCPZ，ADF7021—NBCPZ，ADF7023BCPZ 批量优势供货