INNOLUX DISPLAY CORPORATION

LCD MODULE

SPECIFICATION

Customer: _____

Model Name: AT070TN94

SPEC NO.: A070-94-TT-01

Date: 2009/07/07

Version: 01

■ Preliminary Specification

□ Final Specification

For Customer's Acceptance

Approved by	Comment

Approved by	Reviewed by	Prepared by
Joe Lin 2009/07/07	James Yu 2009/07/07	David Lee 2009/07/07

版權屬於群創所有，禁止任何未經授權的使用
The copyright belongs to InnoLux. Any unauthorized use is prohibited.
The copyright belongs to INNOLUX. Any unauthorized use is prohibited.

InnoLux copyright 2004
All rights reserved,
Copying forbidden.

Record of Revision

Version	Revise Date	Page	Content
Pre-Spec.01	2009/07/07		Initial Release

版權屬於群創所有，禁止任何未經授權的使用
The copyright belongs to INNOLUX. Any unauthorized use is prohibited.
The copyright belongs to InnoLux. Any unauthorized use is prohibited.

INNOLUX

Contents

1. General Specifications 1
2. Pin Assignment 2
3. Operation Specifications 5
   3.1. Absolute Maximum Rating 5
      3.1.1. Typical Operation Conditions 6
      3.1.2. Current Consumption 7
      3.1.3. Backlight Driving Conditions 7
   3.2. Power Sequence 8
   3.3. Timing Characteristics 9
      3.3.1. AC Electrical Characteristics 9
      3.3.2. Data Input Format 10
      3.3.3. Timing 11
4. Optical Specifications 12
5. Reliability Test Items 16
6. General Precautions 17
   6.1. Safety 17
   6.2. Handling 17
   6.3. Static Electricity 17
   6.4. Storage 17
   6.5. Cleaning 17
7. Mechanical Drawing 18
8. Package Drawing 19
   8.1 Packaging Material Table 19
   8.2 Packaging Quantity 19
   8.3 Packaging Drawing 20

版權屬於群創所有, 禁止任何未經授權的使用

The copyright belongs to InnoLux. Any unauthorized use is prohibited.

The copyright belongs to InnoLux. Any unauthorized use is prohibited.

1. General Specifications

No.	Item	Specification	Remark
1	LCD size	7.0 inch(Diagonal)	
2	Driver element	a-Si TFT active matrix	
3	Resolution	800 × 3(RGB) × 480	
4	Display mode	Normally White, Transmissive	
5	Dot pitch	0.0642(W) × 0.1790(H) mm	
6	Active area	154.08(W) × 85.92(H) mm	
7	Module size	164.9(W) ×100.0(H) ×5.7(D) mm	Note 1
8	Surface treatment	Anti-Glare	
9	Color arrangement	RGB-stripe	
10	Interface	Digital	
11	Backlight power consumption	1.674W (Typ.)	
12	Panel power consumption	0.226W (Typ.)	
13	Weight	(150g) (Typ.)	

Note 1: Refer to Mechanical Drawing.

版權屬於群創所有，禁止任何未經授權的使用
The copyright belongs to InnoLux. Any unauthorized use is prohibited.

2. Pin Assignment

TFT LCD Panel Driving Section

FPC Connector is used for the module electronics interface. The recommended model is FH12A-50S-0.5SH manufactured by Hirose.

Pin No.	Symbol	I/O	Function	Remark
1	V_{LED+}	P	Power for LED backlight (Anode)	
2	V_{LED+}	P	Power for LED backlight (Anode)	
3	V_{LED-}	P	Power for LED backlight (Cathode)	
4	V_{LED-}	P	Power for LED backlight (Cathode)	
5	GND	P	Power ground	
6	V_{COM}	I	Common voltage	
7	DV_{DD}	P	Power for Digital Circuit	
8	MODE	I	DE/SYNC mode select	Note 1
9	DE	I	Data Input Enable	
10	VS	I	Vertical Sync Input	
11	HS	I	Horizontal Sync Input	
12	B7	I	Blue data(MSB)	
13	B6	I	Blue data	
14	B5	I	Blue data	
15	B4	I	Blue data	
16	B3	I	Blue data	
17	B2	I	Blue data	
18	B1	I	Blue data	Note 2
19	B0	I	Blue data(LSB)	Note 2
20	G7	I	Green data(MSB)	
21	G6	I	Green data	
22	G5	I	Green data	
23	G4	I	Green data	
24	G3	I	Green data	
25	G2	I	Green data	

版權所有 侵犯必究 禁止任何未經授權的使用
The copyright belongs to InnoLux. Any unauthorized use is prohibited.

26	G1	I	Green data	Note 2
27	G0	I	Green data(LSB)	Note 2
28	R7	I	Red data(MSB)	
29	R6	I	Red data	
30	R5	I	Red data	
31	R4	I	Red data	
32	R3	I	Red data	
33	R2	I	Red data	
34	R1	I	Red data	Note 2
35	R0	I	Red data(LSB)	Note 2
36	GND	P	Power Ground	
37	DCLK	I	Sample clock	Note 3
38	GND	P	Power Ground	
39	L/R	I	Left / right selection	Note 4,5
40	U/D	I	Up/down selection	Note 4,5
41	V_{GH}	P	Gate ON Voltage	
42	V_{GL}	P	Gate OFF Voltage	
43	AV_{DD}	P	Power for Analog Circuit	
44	RESET	I	Global reset pin.	Note 6
45	NC	-	No connection	
46	V_{COM}	I	Common Voltage	
47	DITHB	I	Dithering function	Note 7
48	GND	P	Power Ground	
49	NC	-	No connection	
50	NC	-	No connection	

I: input, O: output, P: Power

Note 1: DE/SYNC mode select. Normally pull high.
When select DE mode, MODE="1", VS and HS must pull high.
When select SYNC mode, MODE= "0", DE must be grounded.
Note 2: When input 18 bits RGB data, the two low bits of R,G and B data must be grounded.
Note 3: Data shall be latched at the falling edge of DCLK.

版權屬於群創所有，禁止任何未經授權的使用

The copyright belongs to InnoLux. Any unauthorized use is prohibited.

Note 4: Selection of scanning mode

Setting of scan control input		Scanning direction
U/D	L/R	
GND	DV_{DD}	Up to down, left to right
DV_{DD}	GND	Down to up, right to left
GND	GND	Up to down, right to left
DV_{DD}	DV_{DD}	Down to up, left to right

Note 5: Definition of scanning direction.
Refer to the figure as below:

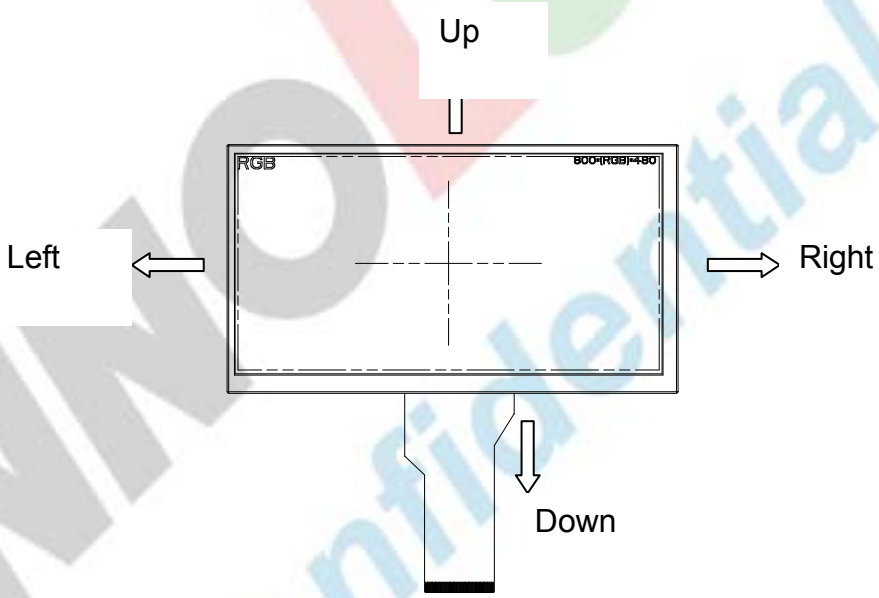

Note 6: Global reset pin. Active low to enter reset state. Suggest to connect with an RC reset circuit for stability. Normally pull high.

Note 7: Dithering function enable control, normally pull high.
When DITHB="1",Disable internal dithering function,
When DITHB="0",Enable internal dithering function,

版權屬於群創所有，禁止任何未經授權的使用
The copyright belongs to InnoLux. Any unauthorized use is prohibited.

3. Operation Specifications

3.1. Absolute Maximum Ratings

(Note 1)

Item	Symbol	Values		Unit	Remark
		Min.	Max.		
Power voltage	DV_{DD}	-0.3	5.0	V	
	AV_{DD}	6.5	13.5	V	
	V_{GH}	-0.3	40.0	V	
	V_{GL}	-20.0	0.3	V	
	V_{GH}-V_{GL}	-	40.0	V	
Operation Temperature	T_{OP}	-30	85	℃	
Storage Temperature	T_{ST}	-30	85	℃	
LED Reverse Voltage	V_R	-	1.2	V	Each LED Note 2
LED Forward Current	I_F	-	25	mA	Each LED

Note 1: The absolute maximum rating values of this product are not allowed to be exceeded at any times. Should a module be used with any of the absolute maximum ratings exceeded, the characteristics of the module may not be recovered, or in an extreme case, the module may be permanently destroyed.
Note 2: V_R Conditions: Zener Diode 20mA

版權屬於群創所有，禁止任何未經授權的使用
The copyright belongs to InnoLux. Any unauthorized use is prohibited.

3.1.1. Typical Operation Conditions

(Note 1)

Item	Symbol	Values			Unit	Remark
		Min.	Typ.	Max.		
Power voltage	DV_{DD}	3.0	3.3	3.6	V	Note 2
	AV_{DD}	10.2	10.4	10.6	V	
	V_{GH}	15.3	16.0	16.7	V	
	V_{GL}	-7.7	-7.0	-6.3	V	
Input signal voltage	V_{COM}	3.8	4.0	4.2	V	
Input logic high voltage	V_{IH}	0.7 DV_{DD}	-	DV_{DD}	V	Note 3
Input logic low voltage	V_{IL}	0	-	0.3 DV_{DD}	V	

Note 1: Be sure to apply DV_{DD} and V_{GL} to the LCD first, and then apply V_{GH}.
Note 2: DV_{DD} setting should match the signals output voltage (refer to Note 3) of customer's system board.
Note 3: DCLK,HS,VS,RESET,U/D, L/R,DE,R0~R7,G0~G7,B0~B7,MODE,DITHB.

版權屬於群創所有，禁止任何未經授權的使用
The copyright belongs to InnoLux. Any unauthorized use is prohibited.

3.1.2. Current Consumption

Item	Symbol	Values			Unit	Remark
		Min.	Typ.	Max.		
Current for Driver	I_{GH}	-	0.2	1.0	mA	V_{GH} =16.0V
	I_{GL}	-	0.2	1.0	mA	V_{GL} = -7.0V
	IDV_{DD}	-	4.0	10	mA	DV_{DD} =3.3V
	IAV_{DD}	-	20	50	mA	AV_{DD} =10.4V

3.1.3. Backlight Driving Conditions

Item	Symbol	Values			Unit	Remark
		Min.	Typ.	Max.		
Voltage for LED backlight	V_L	8.4	9.3	10.2	V	Note 1
Current for LED backlight	I_L	170	180	200	mA	
LED life time	-	20,000	-	-	Hr	Note 2

Note 1: The LED Supply Voltage is defined by the number of LED at Ta=25℃ and I_L =180mA.

Note 2: The “LED life time” is defined as the module brightness decrease to 50% original brightness at Ta=25℃ and I_L =180mA. The LED lifetime could be decreased if operating I_L is lager than 180mA.

版權屬於群創所有，禁止任何未經授權的使用
The copyright belongs to InnoLux. Any unauthorized use is prohibited.

3.2. Power Sequence

a. Power on:

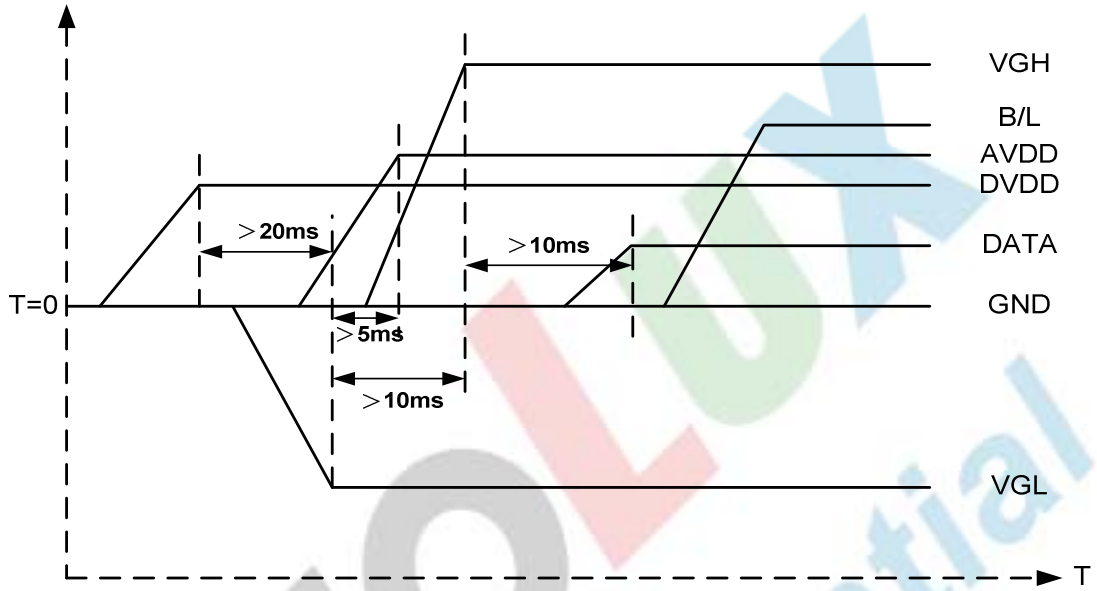

DV_{DD}→VGL→VGH→Data→B/L

b. Power off:

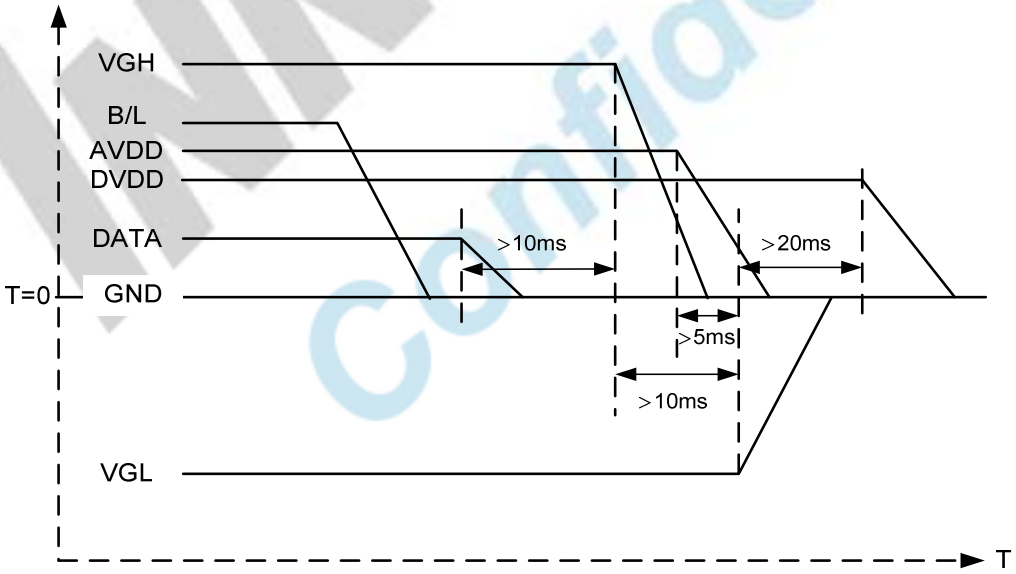

B/L→Data→VGH→VGL→DV_{DD}

Note: Data include R0~R7, B0~B7, GO~G7, U/D, L/R, DCLK, HS,VS,DE.

版權屬於群創所有，禁止任何未經授權的使用

The copyright belongs to InnoLux. Any unauthorized use is prohibited.

3.3. Timing Characteristics

3.3.1. AC Electrical Characteristics

Item	Symbol	Values			Unit	Remark
		Min.	Typ.	Max.		
HS setup time	T_{hst}	8	-	-	ns	
HS hold time	T_{hhd}	8	-	-	ns	
VS setup time	T_{vst}	8	-	-	ns	
VS hold time	T_{vhd}	8	-	-	ns	
Data setup time	T_{dsu}	8	-	-	ns	
Data hole time	T_{dhd}	8	-	-	ns	
DE setup time	T_{esu}	8	-	-	ns	
DE hole time	T_{ehd}	8	-	-	ns	
DV_{DD} Power On Slew rate	T_{POR}	-	-	20	ms	From 0 to 90% DV_{DD}
RESET pulse width	T_{Rst}	1	-	-	ms	
DCLK cycle time	T_{coh}	20	-	-	ns	
DCLK pulse duty	T_{cwh}	40	50	60	%	

版權屬於群創所有, 禁止任何未經授權的使用
The copyright belongs to InnoLux. Any unauthorized use is prohibited.

3.3.2. Data Input Format

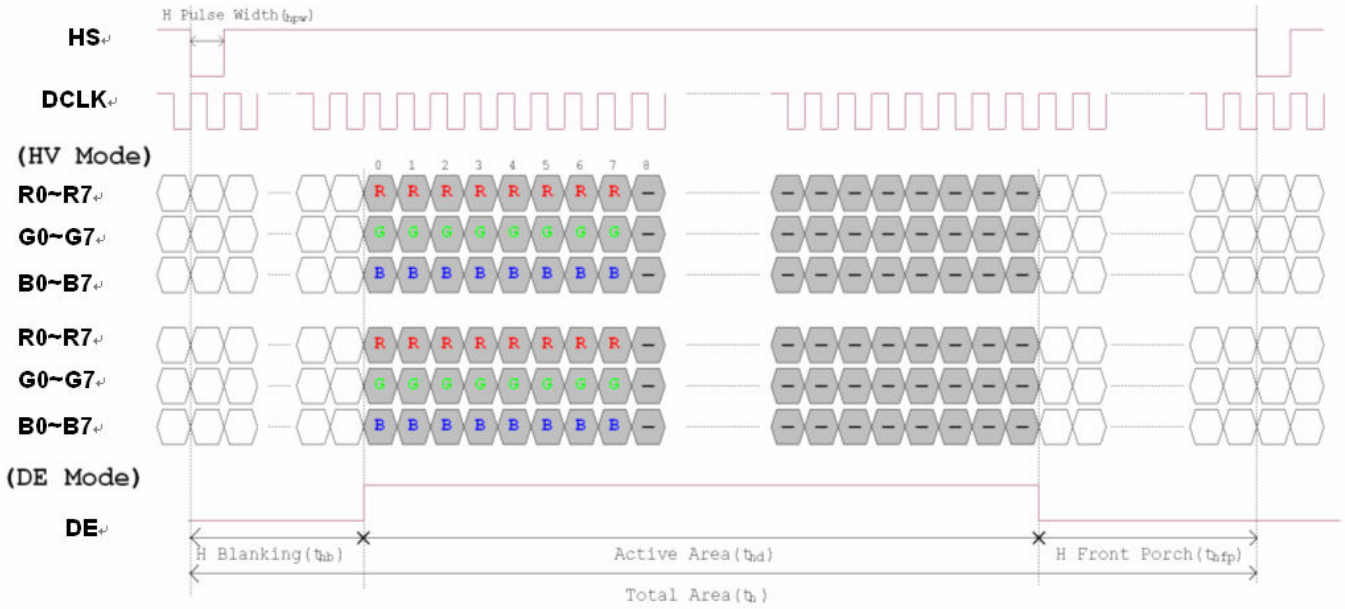

Figure 3. 1 Horizontal input timing diagram.

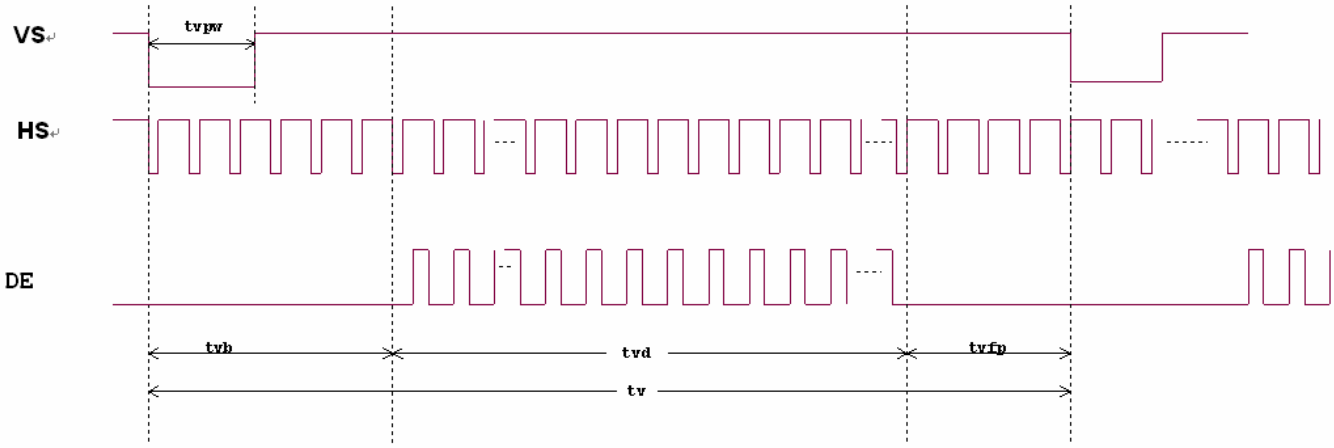

Figure 3. 2 Vertical input timing diagram.

版權屬於群創所有，禁止任何未經授權的使用
The copyright belongs to InnoLux. Any unauthorized use is prohibited.

3.3.3. Timing

Item	Symbol	Values			Unit	Remark
		Min.	Typ.	Max.		
Horizontal Display Area	thd	-	800	-	DCLK	
DCLK Frequency	fclk	26.4	33.3	46.8	MHz	
One Horizontal Line	th	862	1056	1200	DCLK	
HS pulse width	thpw	1	-	40	DCLK	
HS Blanking	thb	46	46	46	DCLK	
HS Front Porch	thfp	16	210	354	DCLK	

Item	Symbol	Values			Unit	Remark
		Min.	Typ.	Max.		
Vertical Display Area	tvd	-	480	-	TH	
VS period time	tv	510	525	650	TH	
VS pulse width	tvpw	1	-	20	TH	
VS Blanking	tvb	23	23	23	TH	
VS Front Porch	tvfp	7	22	147	TH	

版權屬於群創所有，禁止任何未經授權的使用
The copyright belongs to InnoLux. Any unauthorized use is prohibited.

4. Optical Specifications

Item	Symbol	Condition	Values			Unit	Remark
			Min.	Typ.	Max.		
Viewing angle (CR≥ 10)	θ_L	Φ=180°(9 o'clock)	60	70	-	degree	Note 1
	θ_R	Φ=0°(3 o'clock)	60	70	-		
	θ_T	Φ=90°(12 o'clock)	40	50	-		
	θ_B	Φ=270°(6 o'clock)	60	70	-		
Response time	T_{ON}	Normal θ=Φ=0°	-	10	20	msec	Note 3
	T_{OFF}		-	15	30	msec	Note 3
Contrast ratio	CR		400	500	-	-	Note 4
Color chromaticity	W_X		0.26	0.31	0.36	-	Note 2 Note 5 Note 6
	W_Y		0.28	0.33	0.38	-	
Luminance	L		320	400	-	cd/m²	Note 6
Luminance uniformity	Y_U		70	75	-	%	Note 7

Test Conditions:

1. DV_{DD}=3.3V, I_L=180mA (Backlight current), the ambient temperature is 25℃.
2. The test systems refer to Note 2.

版權屬於群創所有，禁止任何未經授權的使用
The copyright belongs to InnoLux. Any unauthorized use is prohibited.

Note 1: Definition of viewing angle range

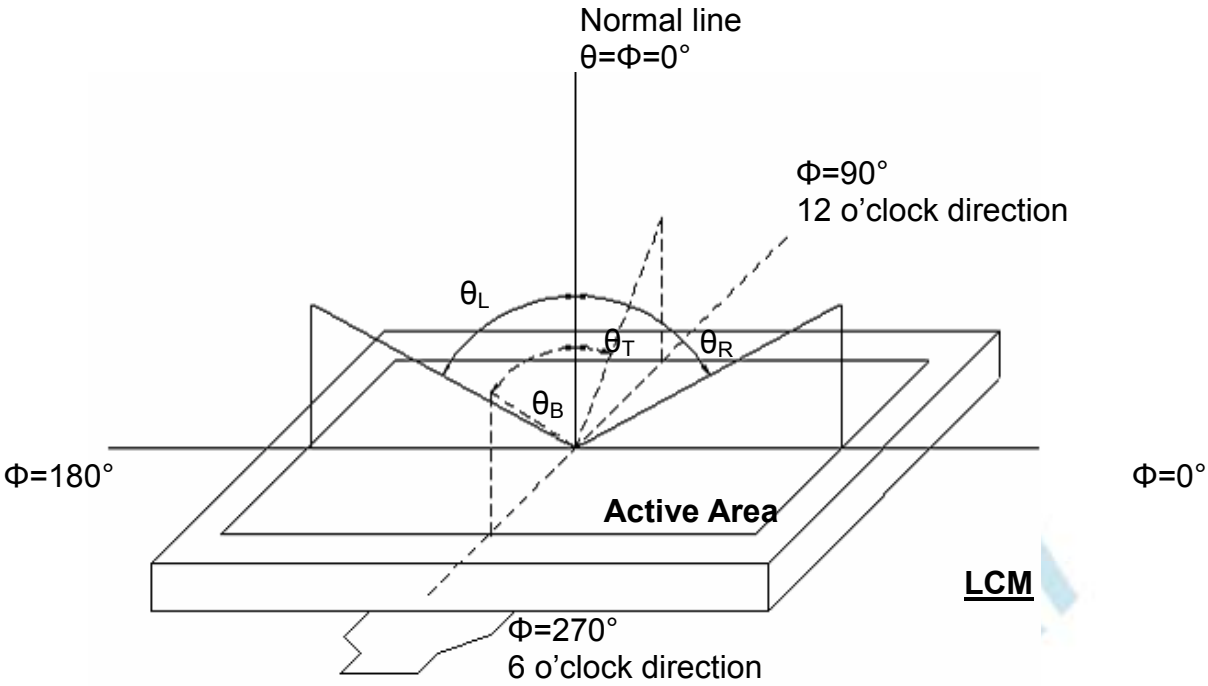

Fig. 4-1 Definition of viewing angle

Note 2: Definition of optical measurement system.

The optical characteristics should be measured in dark room. After 30 minutes operation, the optical properties are measured at the center point of the LCD screen. (Response time is measured by Photo detector TOPCON BM-7, other items are measured by BM-5A/Field of view: 1° /Height: 500mm.)

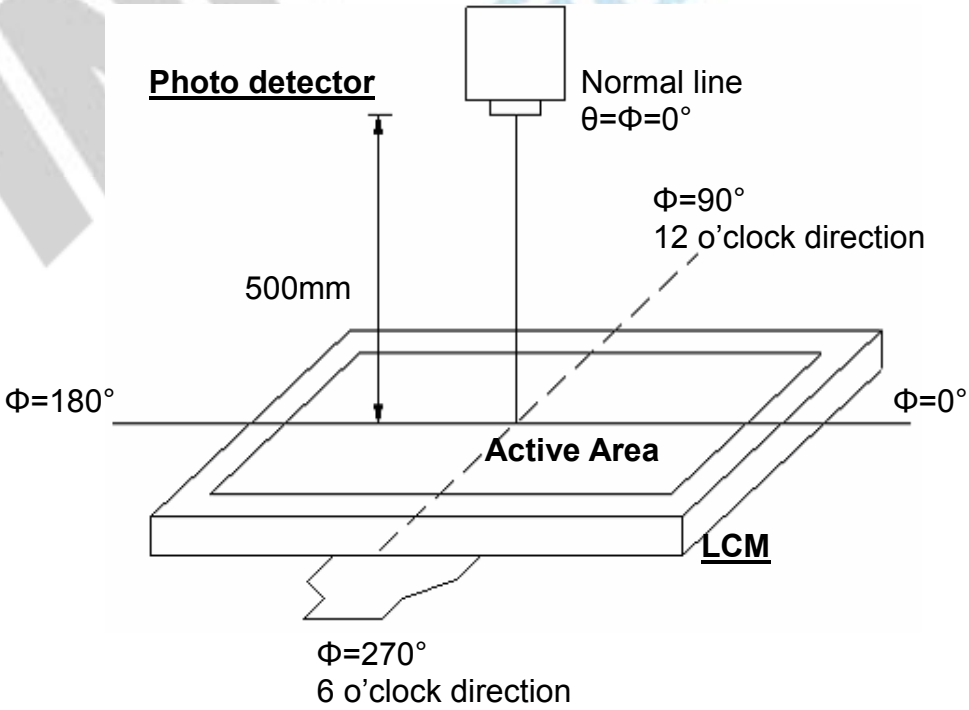

Fig. 4-2 Optical measurement system setup

版權屬於群創所有，禁止任何未經授權的使用
The copyright belongs to InnoLux. Any unauthorized use is prohibited.

Note 3: Definition of Response time

The response time is defined as the LCD optical switching time interval between "White" state and "Black" state. Rise time (T_{ON}) is the time between photo detector output intensity changed from 90% to 10%. And fall time (T_{OFF}) is the time between photo detector output intensity changed from 10% to 90%.

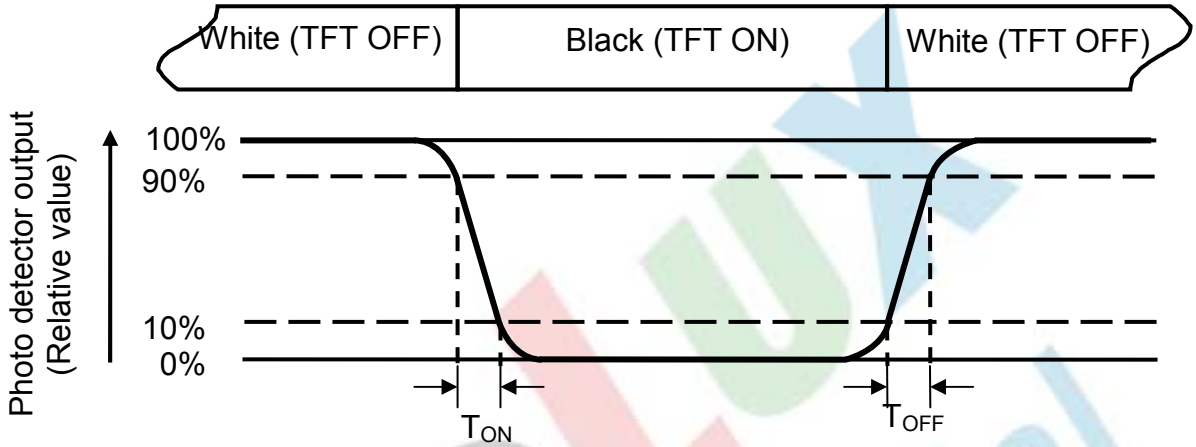

Fig. 4-3 Definition of response time

Note 4: Definition of contrast ratio

$$\text{Contrast ratio (CR)} = \frac{\text{Luminance measured when LCD on the "White" state}}{\text{Luminance measured when LCD on the "Black" state}}$$

Note 5: Definition of color chromaticity (CIE1931)

Color coordinates measured at center point of LCD.

Note 6: All input terminals LCD panel must be ground while measuring the center area of the panel. The LED driving condition is I_L=180mA .

版權屬於群創所有, 禁止任何未經授權的使用

The copyright belongs to InnoLux. Any unauthorized use is prohibited.

Note 7: Definition of Luminance Uniformity

Active area is divided into 9 measuring areas (Refer to Fig. 4-4).Every measuring point is placed at the center of each measuring area.

$$Luminance\ \ Uniformity\ (Yu) = \frac{B_{min}}{B_{max}}$$

L-------Active area length W----- Active area width

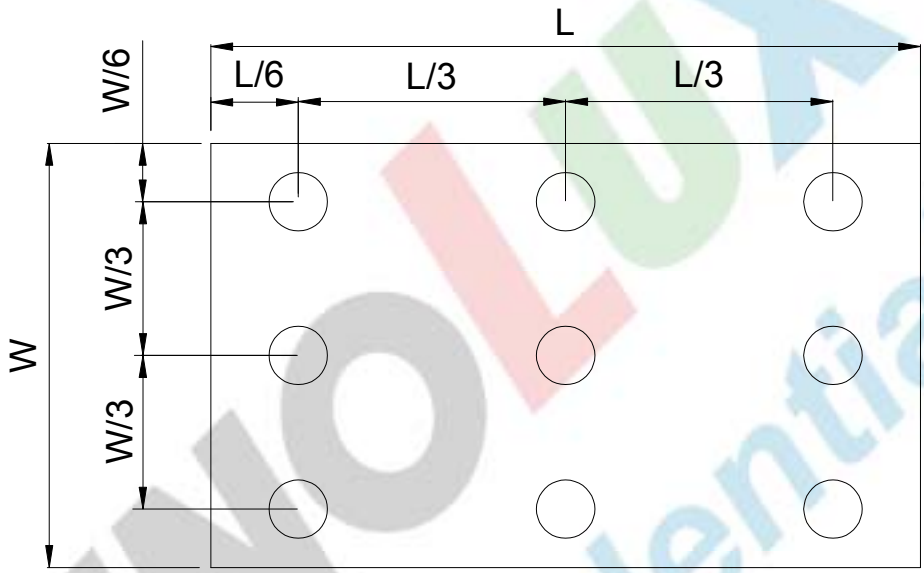

Fig. 4-4 Definition of measuring points

B_{max}: The measured maximum luminance of all measurement position.
B_{min}: The measured minimum luminance of all measurement position.

版權屬於群創所有, 禁止任何未經授權的使用
The copyright belongs to InnoLux. Any unauthorized use is prohibited.

5. Reliability Test Items

(Note3)

Item	Test Conditions	Remark
High Temperature Storage	Ta = 85℃ 240hrs	Note 1，Note 4
Low Temperature Storage	Ta = -30℃ 240hrs	Note 1，Note 4
High Temperature Operation	Ts = 85℃ 240hrs	Note 2，Note 4
Low Temperature Operation	Ta = -30℃ 240hrs	Note 1，Note 4
Operate at High Temperature and Humidity	+60℃, 90%RH 240hrs	Note 4
Thermal Shock	-30℃/30 min ~ +85℃/30 min for a total 100 cycles, Start with cold temperature and end with high temperature.	Note 4
Vibration Test	Frequency range:10~55Hz Stroke:1.5mm Sweep:10Hz~55Hz~10Hz 2 hours for each direction of X. Y. Z. (6 hours for total)	
Mechanical Shock	100G 6ms,±X, ±Y, ±Z 3 times for each direction	
Package Vibration Test	Random Vibration : 0.015G*G/Hz from 5-200HZ, -6dB/Octave from 200-500HZ 2 hours for each direction of X. Y. Z. (6 hours for total)	
Package Drop Test	Height:60 cm 1 corner, 3 edges, 6 surfaces	
Electro Static Discharge	± 2KV, Human Body Mode, 100pF/1500Ω	

Note 1: Ta is the ambient temperature of samples.
Note 2: Ts is the temperature of panel's surface.
Note 3: In the standard condition, there shall be no practical problem that may affect the display function. After the reliability test, the product only guarantees operation, but don't guarantee all of the cosmetic specification.
Note 4: Before cosmetic and function test, the product must have enough recovery time, at least 2 hours at room temperature.

版權屬於群創所有，禁止任何未經授權的使用
The copyright belongs to InnoLux. Any unauthorized use is prohibited.

6. General Precautions

6.1. Safety

Liquid crystal is poisonous. Do not put it in your mouth. If liquid crystal touches your skin or clothes, wash it off immediately by using soap and water.

6.2. Handling

1. The LCD panel is plate glass. Do not subject the panel to mechanical shock or to excessive force on its surface.
2. The polarizer attached to the display is easily damaged. Please handle it carefully to avoid scratch or other damages.
3. To avoid contamination on the display surface, do not touch the module surface with bare hands.
4. Keep a space so that the LCD panels do not touch other components.
5. Put cover board such as acrylic board on the surface of LCD panel to protect panel from damages.
6. Transparent electrodes may be disconnected if you use the LCD panel under environmental conditions where the condensation of dew occurs.
7. Do not leave module in direct sunlight to avoid malfunction of the ICs.

6.3. Static Electricity

1. Be sure to ground module before turning on power or operating module.
2. Do not apply voltage which exceeds the absolute maximum rating value.

6.4. Storage

1. Store the module in a dark room where must keep at 25±10℃ and 65%RH or less.
2. Do not store the module in surroundings containing organic solvent or corrosive gas.
3. Store the module in an anti-electrostatic container or bag.

6.5. Cleaning

1. Do not wipe the polarizer with dry cloth. It might cause scratch.
2. Only use a soft sloth with IPA to wipe the polarizer, other chemicals might permanent damage to the polarizer.

版權屬於群創所有, 禁止任何未經授權的使用

The copyright belongs to InnoLux. Any unauthorized use is prohibited.

7. Mechanical Drawing

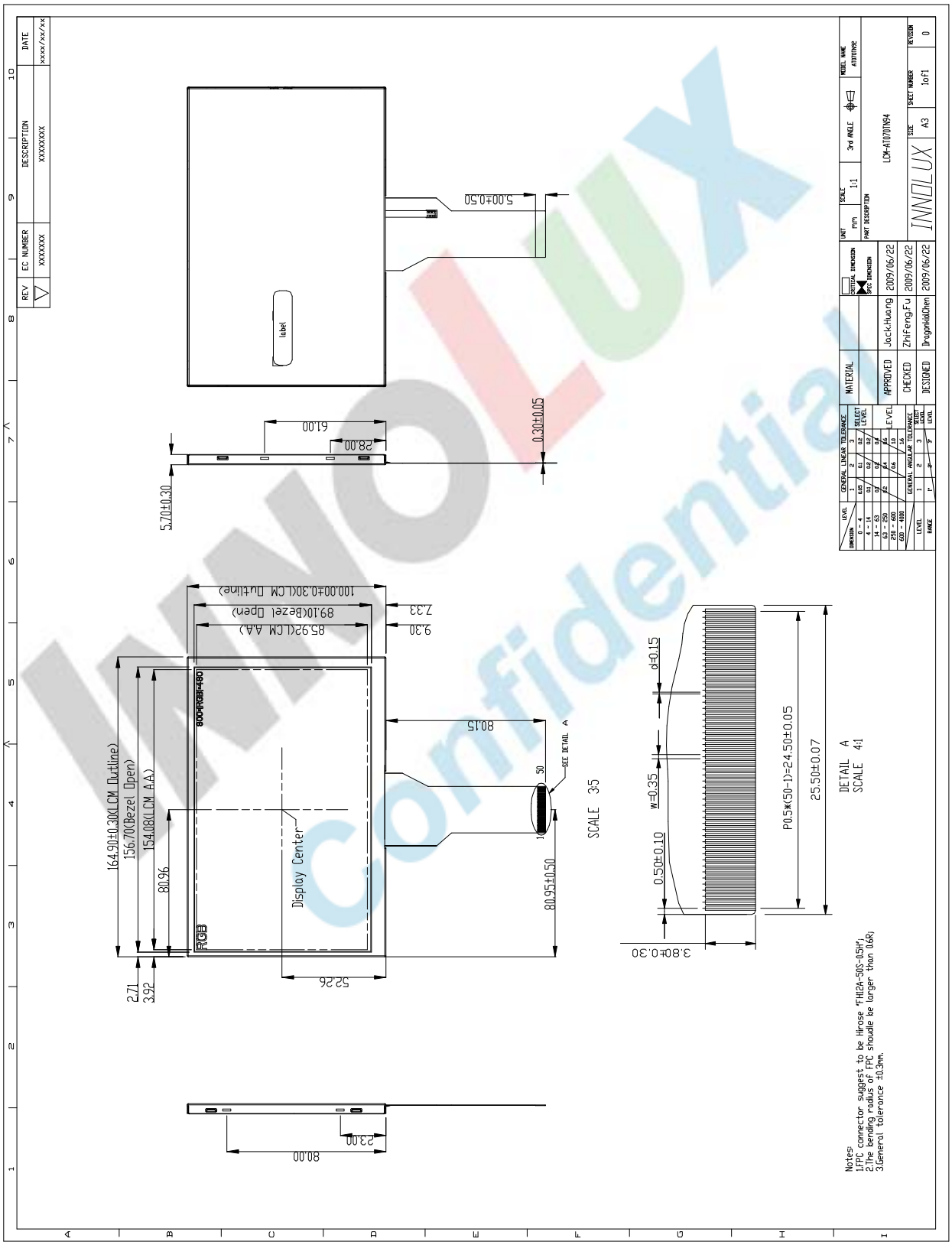

版權屬於群創所有，禁止任何未經授權的使用
The copyright belongs to InnoLux. Any unauthorized use is prohibited.

8. Package Drawing

8.1. Packaging Material Table

No.	Item	Model (Material)	Dimensions(mm)	Unit Weight (kg)	Quantity	Remark
1	LCM Module	AT070TN94	164.9 × 100.0 × 5.7	(0.150)	50pcs	
2	Partition	BC Corrugated paper	512 × 349 × 226	1.466	1set	
3	Corrugated Paper	B Corrugated paper	510 × 350	0.071	4pcs	
4	Corrugated Bar	B Corrugated paper	512 × 11 × 3	0.046	4pcs	
5	Dust-Proof Bag	PE	700 × 530	0.048	1pcs	
6	A/S Bag	PE	180 × 133 × 0.2	0.002	50pcs	
7	Carton	Corrugated paper	530 × 355 × 255	1.100	1pcs	
8	Total weight	(10.682 kg ± 5%)				

8.1 Packaging Quantity

Total LCM quantity in Carton: no. of Partition 2 Rows × quantity per Row 25 = 50

版權屬於群創所有，禁止任何未經授權的使用
The copyright belongs to InnoLux. Any unauthorized use is prohibited.

8.2 Packaging Drawing

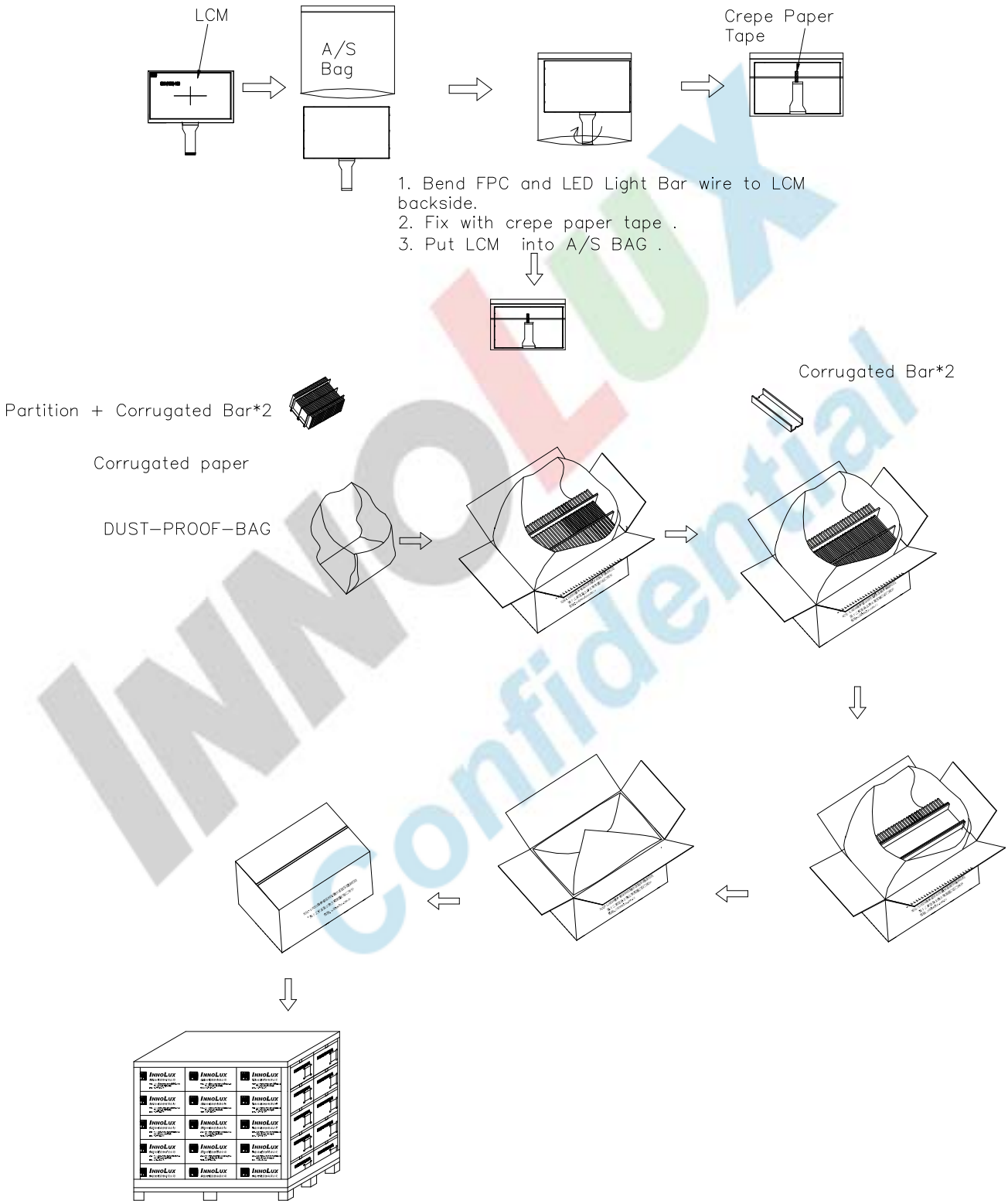

版權屬於群創所有，禁止任何未經授權的使用
The copyright belongs to InnoLux. Any unauthorized use is prohibited.