Doc. Version	0.0
Total Page	22
Date	2007/05/07

Product Specification

4.3" COLOR TFT-LCD MODULE

MODEL NAME: A043FL01 V3

< ◆ >Preliminary Specification

< >Final Specification

Note: The content of this specification is subject to change.

© 2006 AU Optronics
All Rights Reserved,
Do Not Copy.

ALL RIGHTS STRICTLY RESERVED. ANY PORTION OF THIS PAPER SHALL NOT BE REPRODUCED, COPIED, OR TRANSFORMED TO ANY OTHER FORMS WITHOUT PERMISSION FROM AU OPTRONICS CORP.

Record of Revision

Version	Revise Date	Page	Content
0.0	2007/05/07		First draft.

ALL RIGHTS STRICTLY RESERVED. ANY PORTION OF THIS PAPER SHALL NOT BE REPRODUCED, COPIED, OR TRANSFORMED TO ANY OTHER FORMS WITHOUT PERMISSION FROM AU OPTRONICS CORP.

Contents:

A. General Description 4
B. Features 4
C. Physical Specifications 5
D. Outline Dimension (Tentative) 6
E. Electrical Specifications 7
1. Pin Assignment 7
2. Absolute Maximum Ratings 8
3. Electrical Characteristics 9
a. TFT- LCD Panel 9
b. Backlight Driving Conditions 9
4. Suggested Application Circuit 10
a. Suggested Application Circuit (not use SPI control) 10
b. Suggested Application Circuit (use SPI control) 11
5. AC Timing 12
a. Power on/off sequence 12
b. Timing Condition 13
c. Timing Diagram 14
6. Command and Register Map 15
a. Input timing specifications (refer to Fig. 1) 15
b. Serial setting table 16
F. Optical specifications (Note 1, 2) 19
G. Reliability Test Items 21
H. Packing Form 22

ALL RIGHTS STRICTLY RESERVED. ANY PORTION OF THIS PAPER SHALL NOT BE REPRODUCED, COPIED, OR TRANSFORMED TO ANY OTHER FORMS WITHOUT PERMISSION FROM AU OPTRONICS CORP.

A. General Description

A043FL01 V2 is an LTPS transmissive type Thin Film Transistor Liquid crystal Display (TFT-LCD). This model is composed of a TFT-LCD, a driver, an FPC (flexible printed circuit), and a backlight unit.

B. Features

- 4.3-inch display
- WQVGA resolution in RGB stripe dot arrangement
- DC/DC integrated
- High brightness
- Interfaces: parallel RGB 24-bit
- Wide viewing angle
- 2-in-1 FPC for LCD signals and backlight LED power
- Green design

ALL RIGHTS STRICTLY RESERVED. ANY PORTION OF THIS PAPER SHALL NOT BE REPRODUCED, COPIED, OR TRANSFORMED TO ANY OTHER FORMS WITHOUT PERMISSION FROM AU OPTRONICS CORP.

C. Physical Specifications

NO.	Item	Unit	Specification	Remark
1	Display Resolution	dot	480 RGB (H)×272(V)	
2	Active Area	mm	95.04(H)×53.856(V)	
3	Screen Size	inch	4.3(Diagonal)	
4	Dot Pitch	mm	0.066(H)×0.198(V)	
5	Color Configuration	--	R. G. B. Stripe	Note 1
6	Color Depth	--	16.7M Colors	
7	Overall Dimension	mm	105.5(H) × 67.2(V) × 2.89(T)	Note 2
8	Weight	g	TBD	
9	Touch panel surface treatment	--	AG 5%	
10	Display Mode	--	Normally White	
11	Gray Level Inversion Direction		6 O'clock	

Note 1: Below figure shows dot stripe arrangement.

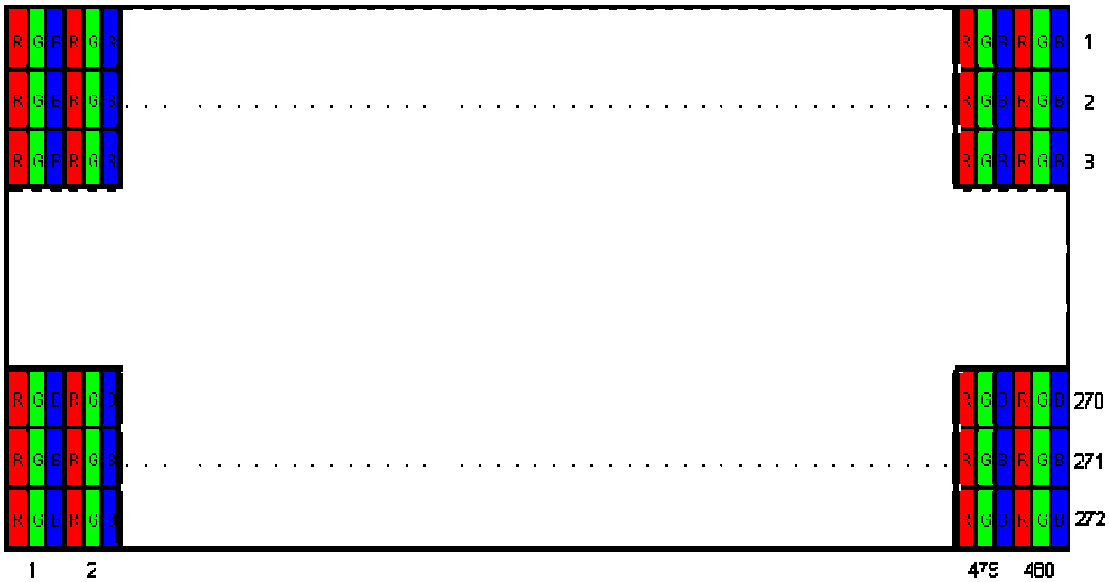

Note 2: Not including FPC. Refer to the drawing next page for further information.

ALL RIGHTS STRICTLY RESERVED. ANY PORTION OF THIS PAPER SHALL NOT BE REPRODUCED, COPIED, OR TRANSFORMED TO ANY OTHER FORMS WITHOUT PERMISSION FROM AU OPTRONICS CORP.

D. Outline Dimension (Tentative)

Notes:
1. General tolerance ±0.3mm
2. The bending radius of FPC should be larger than 0.6
3. Unit : mm
4. Touch panel related size to be defined

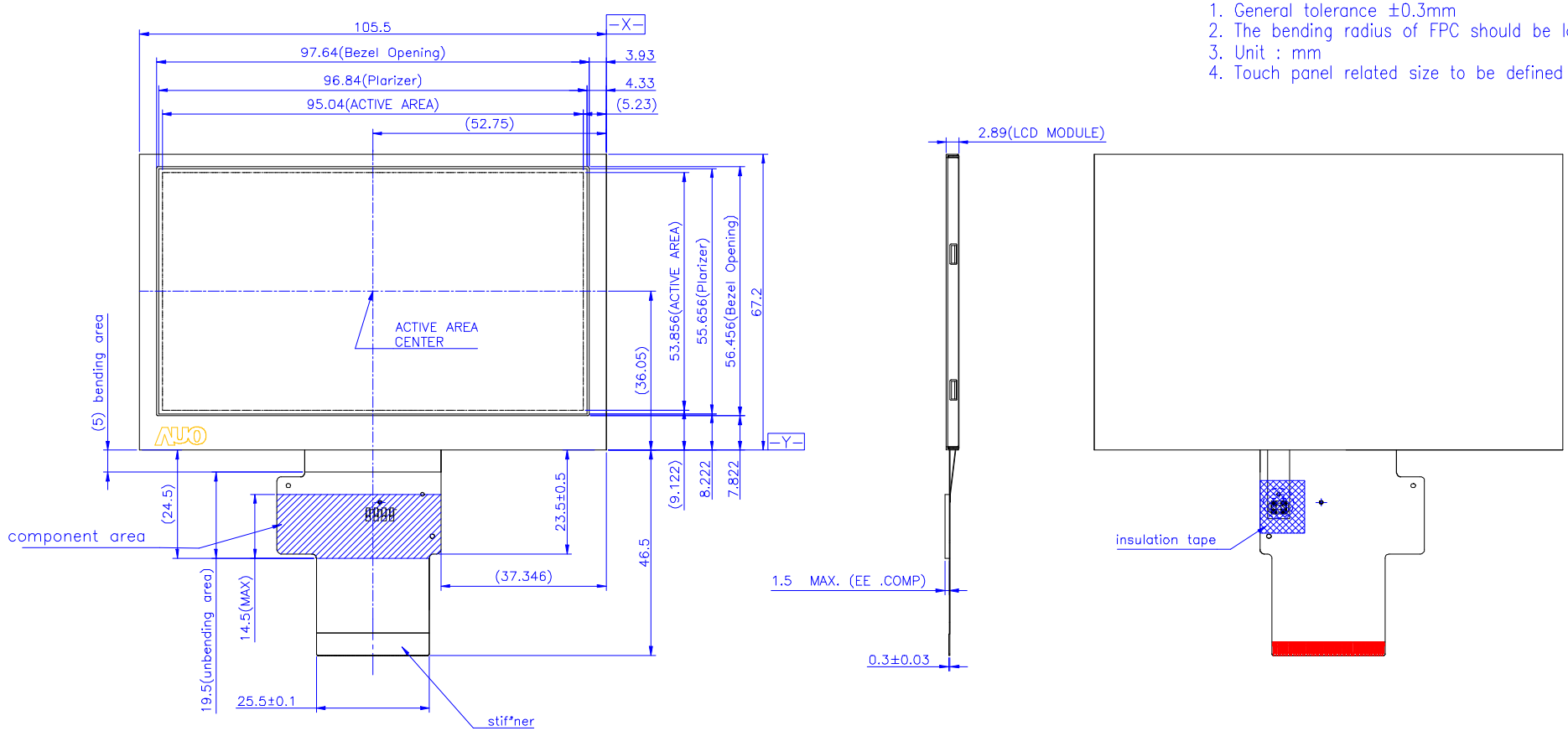

ALL RIGHTS STRICTLY RESERVED. ANY PORTION OF THIS PAPER SHALL NOT BE REPRODUCED, COPIED, OR TRANSFORMED TO ANY OTHER FORMS WITHOUT PERMISSION FROM AU OPTRONICS CORP.

E. Electrical Specifications

1. Pin Assignment

No.	Pin Name	I/O	Description	Remarks
1	GND	G	GND	
2	GND	G	GND	
3	DVDD	PI	Power supply	
4	DVDD	PI	Power supply	
5	R0	I	Red Data Signal (LSB)	
6	R1	I	Red Data Signal	
7	R2	I	Red Data Signal	
8	R3	I	Red Data Signal	
9	R4	I	Red Data Signal	
10	R5	I	Red Data Signal	
11	R6	I	Red Data Signal	
12	R7	I	Red Data Signal (MSB)	
13	G0	I	Green Data Signal (LSB)	
14	G1	I	Green Data Signal	
15	G2	I	Green Data Signal	
16	G3	I	Green Data Signal	
17	G4	I	Green Data Signal	
18	G5	I	Green Data Signal	
19	G6	I	Green Data Signal	
20	G7	I	Green Data Signal (MSB)	
21	B0	I	Blue Data Signal (LSB)	
22	B1	I	Blue Data Signal	
23	B2	I	Blue Data Signal	
24	B3	I	Blue Data Signal	
25	B4	I	Blue Data Signal	
26	B5	I	Blue Data Signal	
27	B6	I	Blue Data Signal	
28	B7	I	Blue Data Signal (MSB)	
29	GND	G	GND	
30	DCLK	I	Pixel clock	
31	DISP	I	Display on/off signal	
32	HSYNC	I	Horizontal synchronizing signal	
33	VSYNC	I	Vertical synchronizing signal	

ALL RIGHTS STRICTLY RESERVED. ANY PORTION OF THIS PAPER SHALL NOT BE REPRODUCED, COPIED, OR TRANSFORMED TO ANY OTHER FORMS WITHOUT PERMISSION FROM AU OPTRONICS CORP.

34	DE	I	Data enable	
35	U/D	-	Scan direction selection	
36	NC	-	NC	
37	GND	G	GND	
38	GND	G	GND	
39	NC	-	NC	
40	NC	-	NC	
41	NC	-	NC	
42	NC	-	NC	
43	SCL	I	3-wire I/F clock input pin	
44	SDA	I	3-wire I/F data input pin	
45	CS	I	3-wire I/F chip select pin	
46	VLED-	PI	LED backlight cathode	
47	VLED+	PI	LED backlight anode	
48	GND	G	GND	
49	GND	G	GND	
50	GND	G	GND	

I: Digital signal input, O: Digital signal output, G: GND, PI: Power input, C: Capacitor

2. Absolute Maximum Ratings

Items	Symbol	Values		Unit	Condition
		Min.	Max.		
Power Voltage	VDD	-0.3	4.5	V	
Input Signal Voltage	Vi	0.8* VDD	VDD	V	
	VI	GND	0.2* VDD	V	
LED Reverse Voltage	Vr	--	3.5	V	One LED
LED Forward Current	If	--	25	mA	One LED

Note 1.If the operating condition exceeds the absolute maximum ratings, the TFT-LCD module may be damaged permanently. Also, if the module operated with the absolute maximum ratings for a long time, its reliability may drop.

ALL RIGHTS STRICTLY RESERVED. ANY PORTION OF THIS PAPER SHALL NOT BE REPRODUCED, COPIED, OR TRANSFORMED TO ANY OTHER FORMS WITHOUT PERMISSION FROM AU OPTRONICS CORP.

3. Electrical Characteristics

The following items are measured under stable condition and suggested application circuit.

a. TFT- LCD Panel

Parameter	Symbol	Min	Typ	Max	Unit	Notes
Power Supply	VDD	3.0		3.6	V	
Frame Frequency	f_{Frame}		60	70	Hz	
Dot Data Clock	DCLK		9.2	TBD	MHz	

Note 1. Panel surface temperature should be kept less than content of section E.2. “Absolute maximum ratings"

b. Backlight Driving Conditions

Parameter	Symbol	Min.	Typ.	Max.	Unit	Remark
LED Supply	I_L		20		mA	single serial
LED Supply	V_L		(22.4)		V	single serial
LED Life Time	L_L	10,000	---	---	Hr	Note 2, 3

Note 1: LED backlight is 7 LEDs serial type.

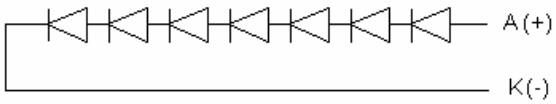

Note 2: The LED lifetime could be decreased if operating ILis larger than 25mA

ALL RIGHTS STRICTLY RESERVED. ANY PORTION OF THIS PAPER SHALL NOT BE REPRODUCED, COPIED, OR TRANSFORMED TO ANY OTHER FORMS WITHOUT PERMISSION FROM AU OPTRONICS CORP.

4. Suggested Application Circuit

a. Suggested Application Circuit (not use SPI control)

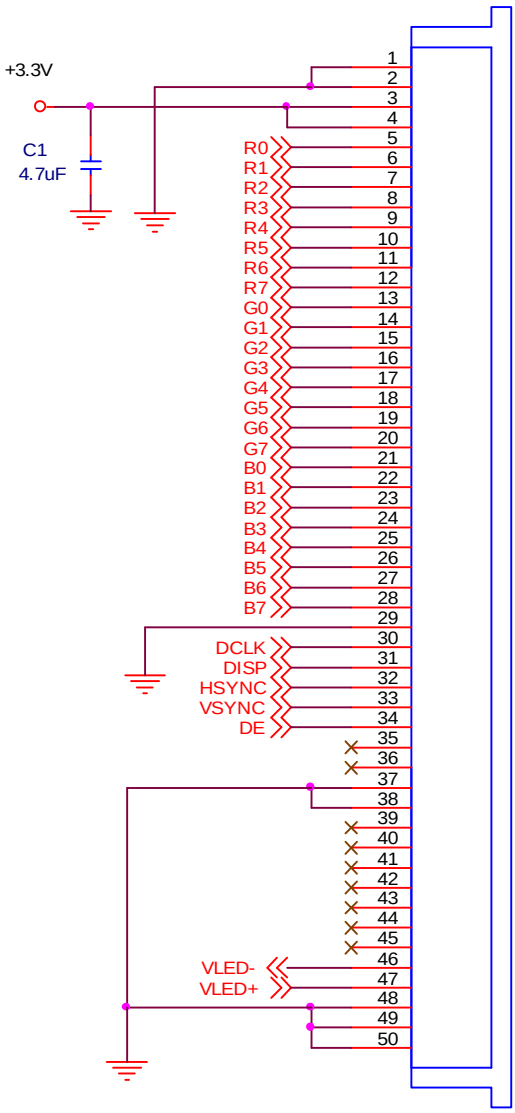

ALL RIGHTS STRICTLY RESERVED. ANY PORTION OF THIS PAPER SHALL NOT BE REPRODUCED, COPIED, OR TRANSFORMED TO ANY OTHER FORMS WITHOUT PERMISSION FROM AU OPTRONICS CORP.

b. Suggested Application Circuit (use SPI control)

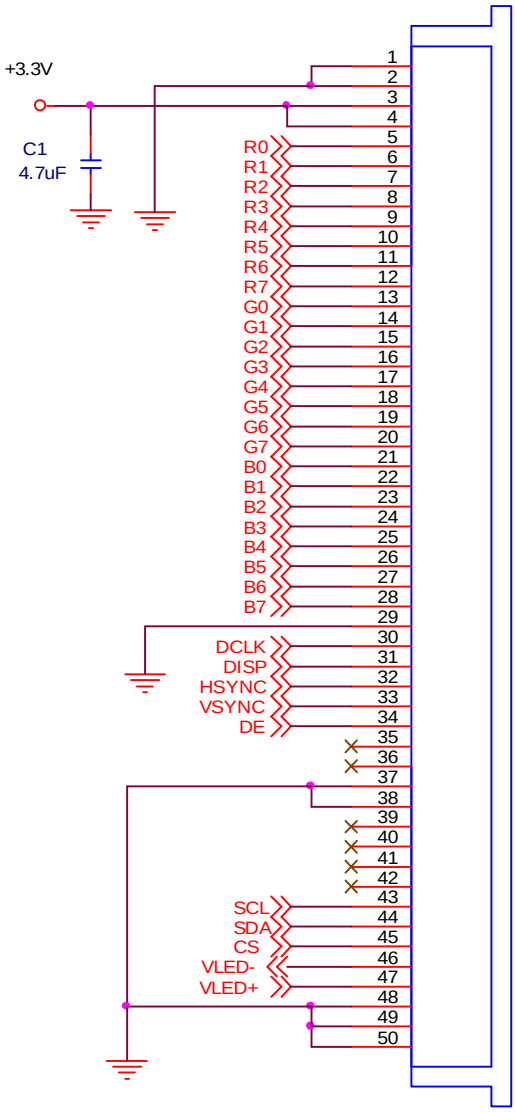

ALL RIGHTS STRICTLY RESERVED. ANY PORTION OF THIS PAPER SHALL NOT BE REPRODUCED, COPIED, OR TRANSFORMED TO ANY OTHER FORMS WITHOUT PERMISSION FROM AU OPTRONICS CORP.

5. AC Timing

a. Power on/off sequence

Power On (Display ON; Standby Disabling)

The LCD driver is in default standby mode after VDD/VDDIO power-on, and set the register DISP to high to disable the standby mode is required for normal operation. When the standby mode is disabled, a build-in power on sequence is started. The driver IC analog power VDD2 is turned on first, and then the LCD positive and negative power supplies VGH/VGL are pumped, and followed by the LED power. Since we recommend using external LED driver, the backlight power should be provided at this time. Please refer to power on sequence for the detail timing.

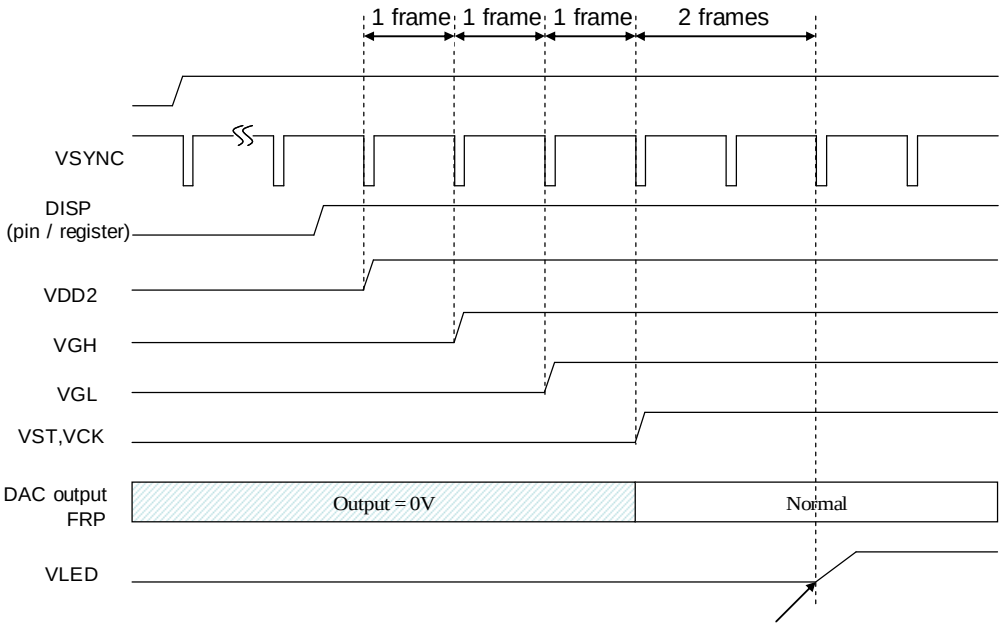

Power-Off (Display Off; Standby Enabling)

When the register DISP is set to low to enable standby mode, a build-in power off sequence is started. Please also refer to the power off sequence for the detail timing.

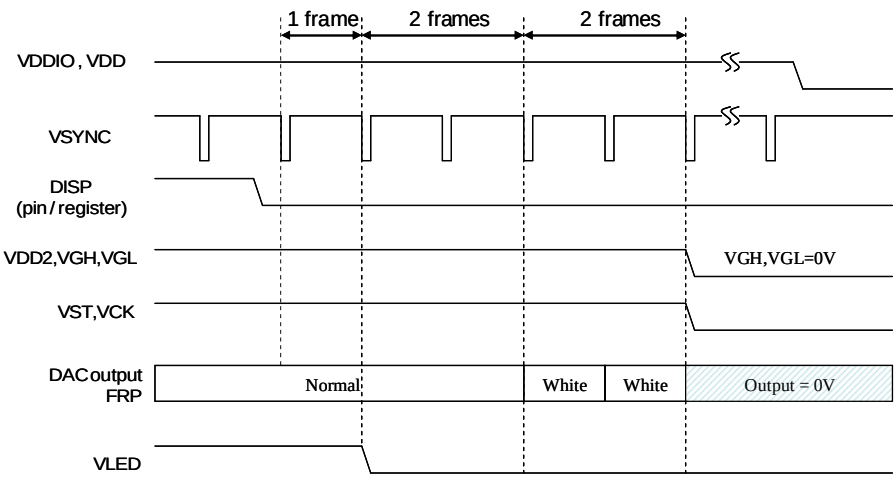

ALL RIGHTS STRICTLY RESERVED. ANY PORTION OF THIS PAPER SHALL NOT BE REPRODUCED, COPIED, OR TRANSFORMED TO ANY OTHER FORMS WITHOUT PERMISSION FROM AU OPTRONICS CORP.

Low-voltage reset

Following figure suggests for low voltage reset function on power on sequence. When low voltage reset function enable, all the registers are loaded to default setting.

A. The rising time (10%-90%) of VDD nedds larger than 1ms.

B. After power off, VDD needs to be keep under 0.5V more than 500ms, then it can be power on again.

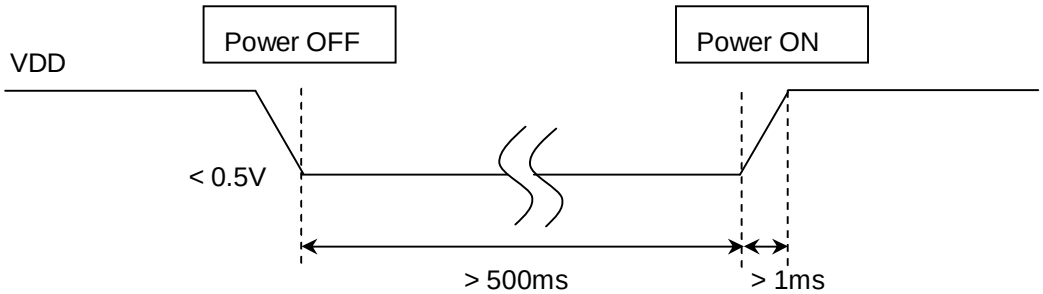

b. Timing Condition

Parameter		Symbol	Min.	Typ.	Max.	Unit.	Remark
Clock	Frequency	1/Tc	--	9.2	10	MHz	
	High Time	TCH	40	--	--	ns	
	Low Time	TCL	40	--	--	ns	
Data	Setup Time	TDS	10	--	--	ns	
	Hold Time	TDH	3	--	--	ns	
DE	Setup Time	TDES	10	--	--	ns	
	Hold Time	TDEH	3	--	--	ns	
Frame Frequency	Cycle	tv		16.7		ms	
1 Frame Scanning Time	Cycle	tv	--	288	--	H	
	Display Period	tvd	272			H	
	Front porch	tvf	2	4		H	
	Pulse width	tvp	1	10		H	
	Back porch	tvb	2	2		H	
1 Line Scanning Time	Cycle	th	490	533	545	DCLK	
	Display Period	thd	480			DCLK	
	Front porch	thf	2	8		DCLK	
	Pulse width	thp	1	41		DCLK	
	Back porch	thb	2	4		DCLK	

ALL RIGHTS STRICTLY RESERVED. ANY PORTION OF THIS PAPER SHALL NOT BE REPRODUCED, COPIED, OR TRANSFORMED TO ANY OTHER FORMS WITHOUT PERMISSION FROM AU OPTRONICS CORP.

c. Timing Diagram

Vertical Timing of Input

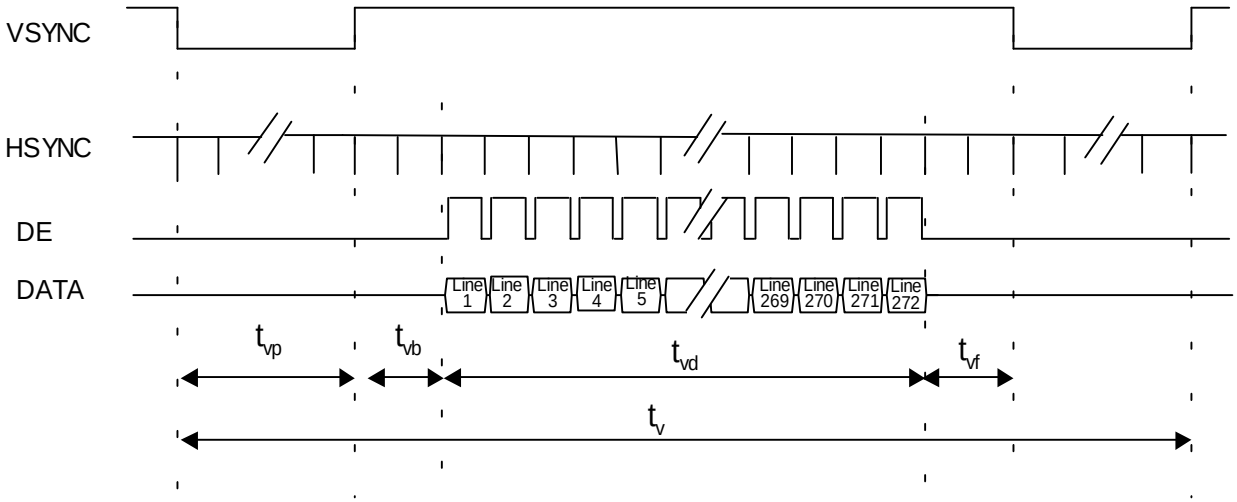

Horizontal Timing of Input

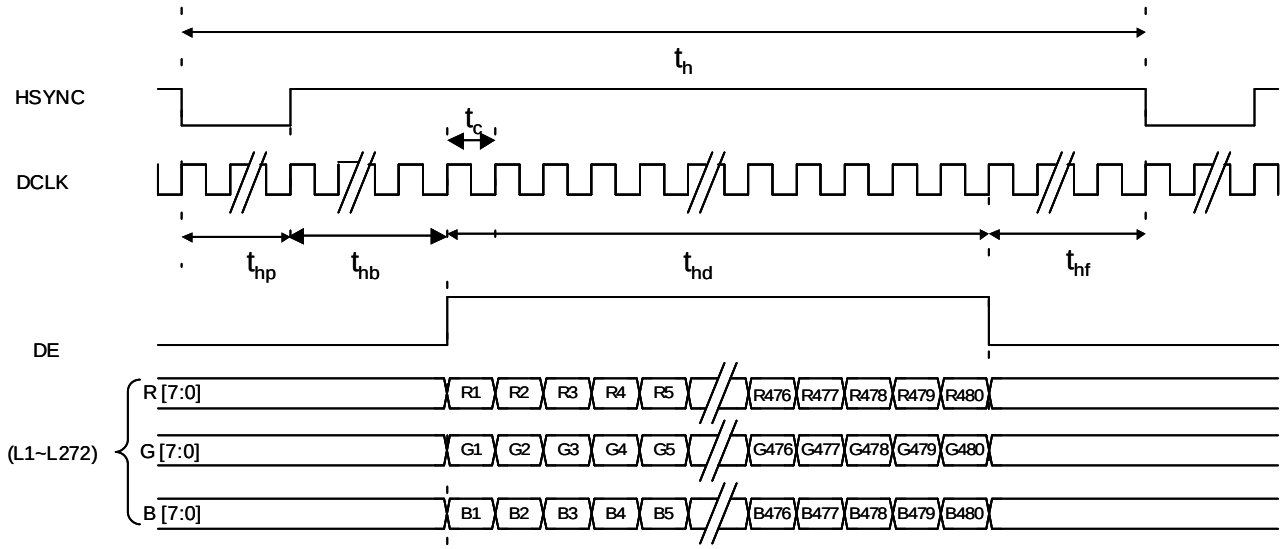

ALL RIGHTS STRICTLY RESERVED. ANY PORTION OF THIS PAPER SHALL NOT BE REPRODUCED, COPIED, OR TRANSFORMED TO ANY OTHER FORMS WITHOUT PERMISSION FROM AU OPTRONICS CORP.

6. Command and Register Map

a. Input timing specifications (refer to Fig. 1)

Parameter	Symbol	Min.	Typ.	Max.	Unit.	Remark
Serial load input setup time	t_{s0}	50			ns	
Serial load input hold time	t_{h0}	50			ns	
Serial data input setup time	t_{s1}	50			ns	
Serial data input hold time	t_{h1}	50			ns	
SCL pulse width	t_{WL1}	50			ns	
	t_{WH1}	50			ns	
CS pulse width	t_{W2}	400			ns	

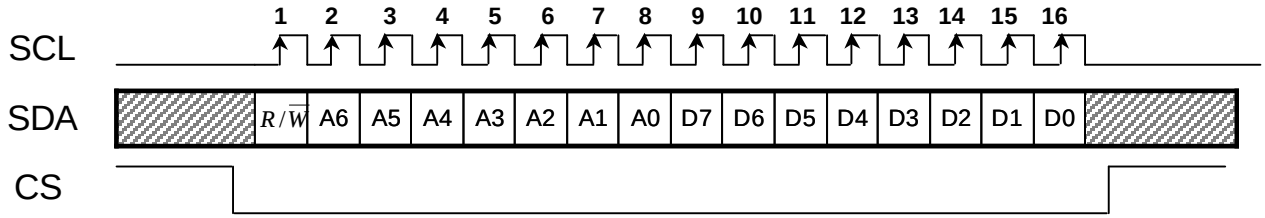

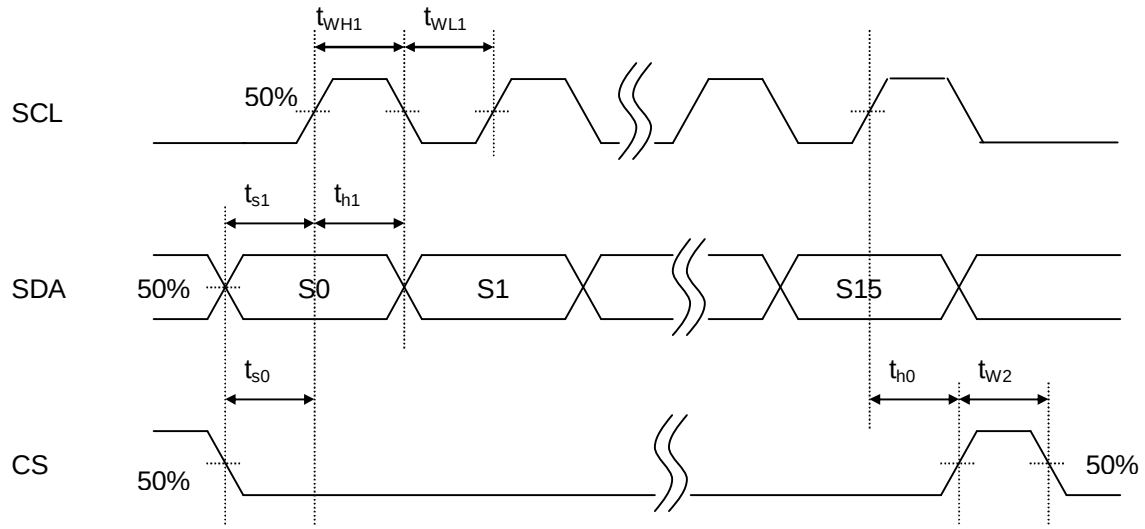

Fig.1 Serial Interface Control Timing

ALL RIGHTS STRICTLY RESERVED. ANY PORTION OF THIS PAPER SHALL NOT BE REPRODUCED, COPIED, OR TRANSFORMED TO ANY OTHER FORMS WITHOUT PERMISSION FROM AU OPTRONICS CORP.

b. Serial setting table

No	Register Address								Register Data (Default Setting)							
	$R/\overline{W}$	A6	A5	A4	A3	A2	A1	A0	D7	D6	D5	D4	D3	D2	D1	D0
R0	0	0	0	0	0	0	0	0	X	VDIR(1)	HDIR(1)	0	VCOM_AC(0110)			
R1	0	0	0	0	0	0	0	1	0	VCOM_DC(40h)						
R2	0	0	0	0	0	0	1	0	CONTRAST(40h)							
R3	0	0	0	0	0	0	1	1	X	SUB-CONTRAST_R(40h)						
R4	0	0	0	0	0	1	0	0	X	SUB-CONTRAST_B(40h)						
R5	0	0	0	0	0	1	0	1	BRIGHTNESS(40h)							
R6	0	0	0	0	0	1	1	0	X	SUB-BRIGHTNESS_R(40h)						
R7	0	0	0	0	0	1	1	1	X	SUB-BRIGHTNESS_B(40h)						

Note 1: X is “don’t care”. “ ” could be registered by customer.

Note 2: VCOM_DC is designed by resistance control now. It could not be registered by customer.

Register R0

Register	$R/\overline{W}$	Address	D7	D6	D5	D4	D3	D2	D1	D0
R0	0	00h	X	VDIR	HDIR	0	VCOM_AC			

VCOM_AC : Common voltage AC level selection (deviation ±0.1V)

VCOM_AC				Voltage (V)
D3	D2	D1	D0	
0	0	0	0	5.8
0	0	0	1	5.9
0	0	1	0	6.0
0	0	1	1	6.1
0	1	0	0	6.2
0	1	0	1	6.3
0	1	1	0	6.4 (Default)
0	1	1	1	6.5
1	0	0	0	6.6
1	0	0	1	6.7
1	0	1	0	6.8
1	0	1	1	6.9
1	1	X	X	7.0

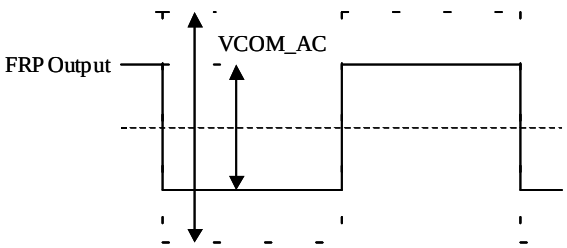

ALL RIGHTS STRICTLY RESERVED. ANY PORTION OF THIS PAPER SHALL NOT BE REPRODUCED, COPIED, OR TRANSFORMED TO ANY OTHER FORMS WITHOUT PERMISSION FROM AU OPTRONICS CORP.

Register	$R/\overline{W}$	Address	D7	D6	D5	D4	D3	D2	D1	D0
R0	0	00h	X	VDIR	HDIR	0	VCOM_AC			

HDIR : Horizontal shift direction setting

HDIR	Description
0	Shift from right to left, ex : Last data = Y1 ¬ Y2…Y1439 ¬ Y1440 = First data
1	Shift from left to right, ex : First data = Y1 ® Y2…Y1439 ® Y1440 = Last data (Default)

VDIR : Vertical shift direction setting

VDIR	Description
0	Shift from down to up, ex : Last line = L1 ¬ L2…L271 ¬ L272 = First line
1	Shift from up to down, ex : First line = L1 ® L2…L271 ® L272 = Last line (Default)

Register R2, R3, R4, R5, R6, R7

Register	$R/\overline{W}$	Address	D7	D6	D5	D4	D3	D2	D1	D0
R2	0	02h	CONTRAST							

CONTRAST : RGB contrast level setting, the gain changes (1/64) / bit

CONTRAST D7~D0	Gain
00h	0
40h	1 (Default)
FFh	3.984

Register	$R/\overline{W}$	Address	D7	D6	D5	D4	D3	D2	D1	D0
R3	0	03h	X	SUB-CONTRAST_R						

Register	$R/\overline{W}$	Address	D7	D6	D5	D4	D3	D2	D1	D0
R4	0	04h	X	SUB-CONTRAST_B						

SUB-CONTRAST_RB : RB sub-contrast level setting, the gain changes (1/256) / bit

SUB-CONTRAST D6~D0	Gain
00h	0.75
40h	1 (Default)
7Fh	1.246

ALL RIGHTS STRICTLY RESERVED. ANY PORTION OF THIS PAPER SHALL NOT BE REPRODUCED, COPIED, OR TRANSFORMED TO ANY OTHER FORMS WITHOUT PERMISSION FROM AU OPTRONICS CORP.

Register	$R/\overline{W}$	Address	D7	D6	D5	D4	D3	D2	D1	D0
R5	0	05h	BRIGHTNESS							

BRIGHTNESS : RGB bright level setting, setting accuracy : 1 step / bit

BRIGHTNESS D7~D0	Setting
00h	Dark (-64)
40h	Center (0) (Default)
FFh	Bright (+191)

Register	$R/\overline{W}$	Address	D7	D6	D5	D4	D3	D2	D1	D0
R6	0	06h	X	SUB-BRIGHTNESS_R						

Register	$R/\overline{W}$	Address	D7	D6	D5	D4	D3	D2	D1	D0
R7	0	07h	X	SUB-BRIGHTNESS_B						

SUB-BRIGHTNESS_RB : RB sub-brightness level setting, setting accuracy : 1 step / bit

SUB-BRIGHTNESS D6~D0	Setting
00h	Dark (-64)
40h	Center (0) (Default)
7Fh	Bright (+63)

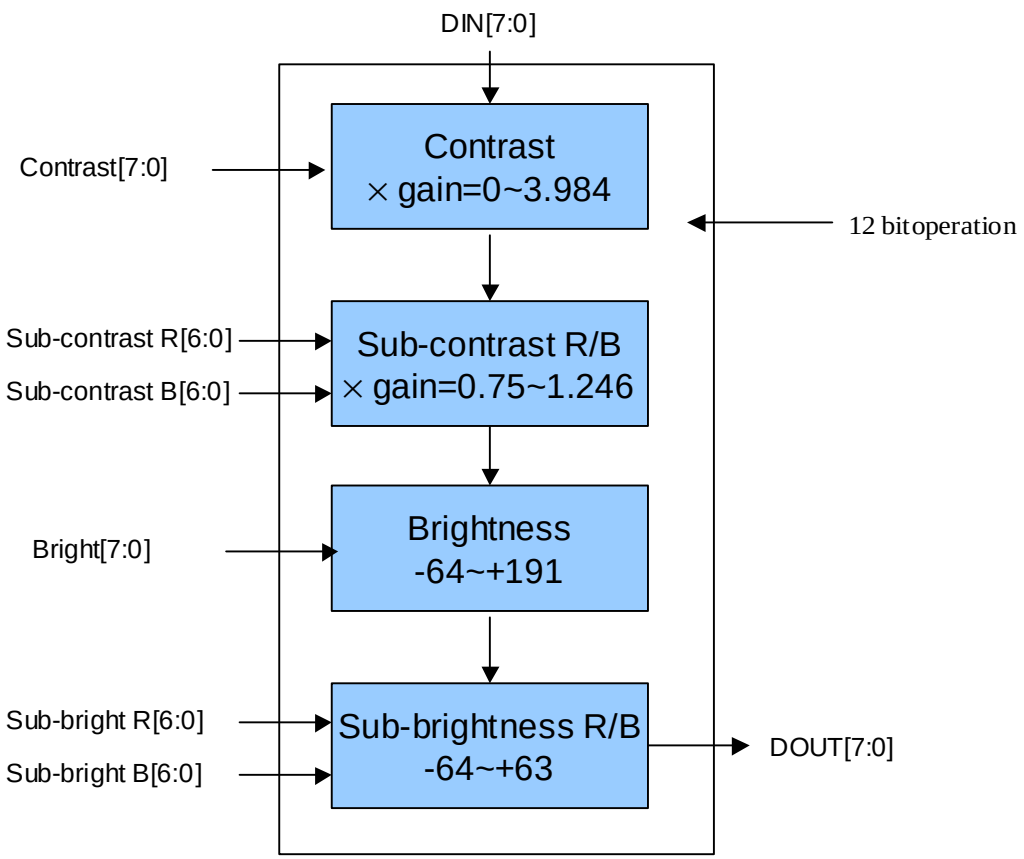

ALL RIGHTS STRICTLY RESERVED. ANY PORTION OF THIS PAPER SHALL NOT BE REPRODUCED, COPIED, OR TRANSFORMED TO ANY OTHER FORMS WITHOUT PERMISSION FROM AU OPTRONICS CORP.

F. Optical specifications (Note 1, 2)

Item	Symbol	Condition	Min.	Typ.	Max.	Unit	Remark
Response Time							
Rise	Tr	$\theta=0^{\circ}$	-	15	25	ms	Note 3
Fall	Tf		-	20	30	ms	
Contrast ratio	CR	At optimized viewing angle	200	300	-		Note 5, 6
Viewing Angle							
Top			30	40	-		
Bottom		CR≧10	45	55	-	deg.	Note 7, 8
Left			50	60	-		
Right			50	60	-		
Brightness	Y_L	$\theta=0^{\circ}$	TBD	500		cd/m^2	Note 9
White Chromaticity	X	$\theta=0^{\circ}$		TBD			
	y	$\theta=0^{\circ}$		TBD			

Note 1: Measurement should be performed in the dark room, optical ambient temperature =25°C, and backlight current I_L=20 mA

Note 2: To be measured on the center area of panel with a field angle of 1°by Topcon luminance meter BM-7, after 10 minutes operation.

Note 3: Definition of response time:

The output signals of photo detector are measured when the input signals are changed from “black” to “white”(falling time) and from “white” to “black”(rising time), respectively.

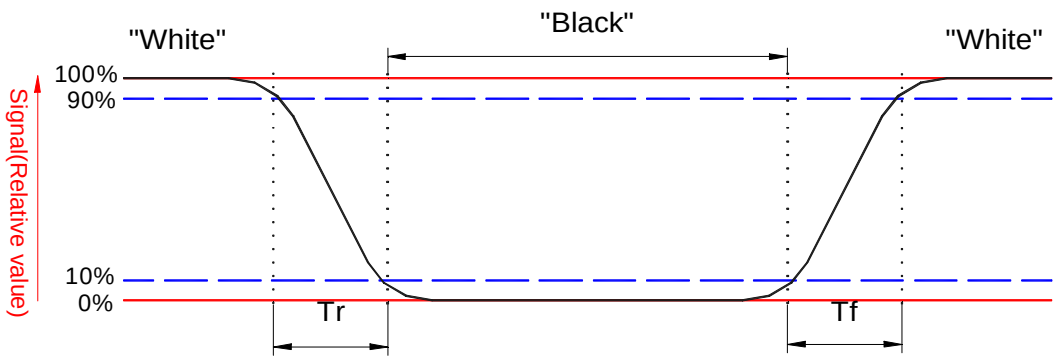

Note 4. From liquid crystal characteristics, response time will become slower and the color of panel will become darker when ambient temperature is below 25℃.

$$\text{Contrastratio} = \frac{\text{Photo detector output when LCD is at "White" state}}{\text{Photo detector output when LCD is at "Black" state}}$$

Note 5. Contrast ratio is calculated with the following formula.

Note 6. White Vi=Vi50∓1.5V

ALL RIGHTS STRICTLY RESERVED. ANY PORTION OF THIS PAPER SHALL NOT BE REPRODUCED, COPIED, OR TRANSFORMED TO ANY OTHER FORMS WITHOUT PERMISSION FROM AU OPTRONICS CORP.

Black Vi=Vi50 ± 2.0V

"±" means that the analog input signal swings in phase with COM signal.

"∓" means that the analog input signal swings out of phase with COM signal.

Vi50 :The analog input voltage when transmission is 50%

The 100% transmission is defined as the transmission of LCD panel when all the input terminals of module are electrically opened.

Note 7. Definition of viewing angle: refer to figure as below.

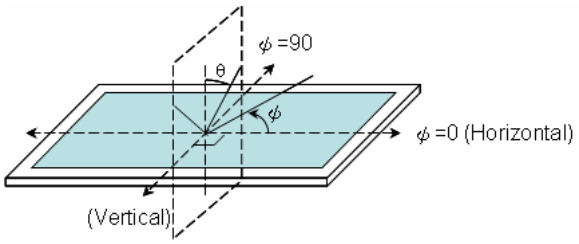

Note 8. The viewing angles are measured at the center area of the panel when all the input terminals of LCD panel are electrically opened.

Note 9. Brightness is measured at the center of the display perpendicular to the panel surface.

ALL RIGHTS STRICTLY RESERVED. ANY PORTION OF THIS PAPER SHALL NOT BE REPRODUCED, COPIED, OR TRANSFORMED TO ANY OTHER FORMS WITHOUT PERMISSION FROM AU OPTRONICS CORP.

G. Reliability Test Items

No.	Test items	Conditions		Remark
1	High Temperature Storage	Ta= 80℃	240Hrs	
2	Low Temperature Storage	Ta= -30℃	240Hrs	
3	High Temperature Operation	Ta= 70℃	240Hrs	
4	Low Temperature Operation	Ta= -20℃	240Hrs	
5	High Temperature & High Humidity	Ta= 60℃. 90% RH	240Hrs	Operation
6	Heat Shock	-25℃~70℃, 50 cycle, 2Hrs/cycle		Non-operation
7	Electrostatic Discharge	±200V,200pF(0Ω), once for each terminal		Non-operation
8	Vibration (With Carton)	Random vibration: 0.015G^2/Hz from 5~200Hz –6dB/Octave from 200~500Hz		IEC 68-34
9	Drop (With Carton)	Height: 60cm 1 corner, 3 edges, 6 surfaces		

Note 1: Ta: Ambient temperature.

Note 2: In the standard condition, there is not display function NG issue occurred. All the cosmetic specification is judged before the reliability stress.

ALL RIGHTS STRICTLY RESERVED. ANY PORTION OF THIS PAPER SHALL NOT BE REPRODUCED, COPIED, OR TRANSFORMED TO ANY OTHER FORMS WITHOUT PERMISSION FROM AU OPTRONICS CORP.

H. Packing Form

TBD

ALL RIGHTS STRICTLY RESERVED. ANY PORTION OF THIS PAPER SHALL NOT BE REPRODUCED, COPIED, OR TRANSFORMED TO ANY OTHER FORMS WITHOUT PERMISSION FROM AU OPTRONICS CORP.