8 Video Processing Subsystem

8.1 Block Diagram of Video Processing Subsystem

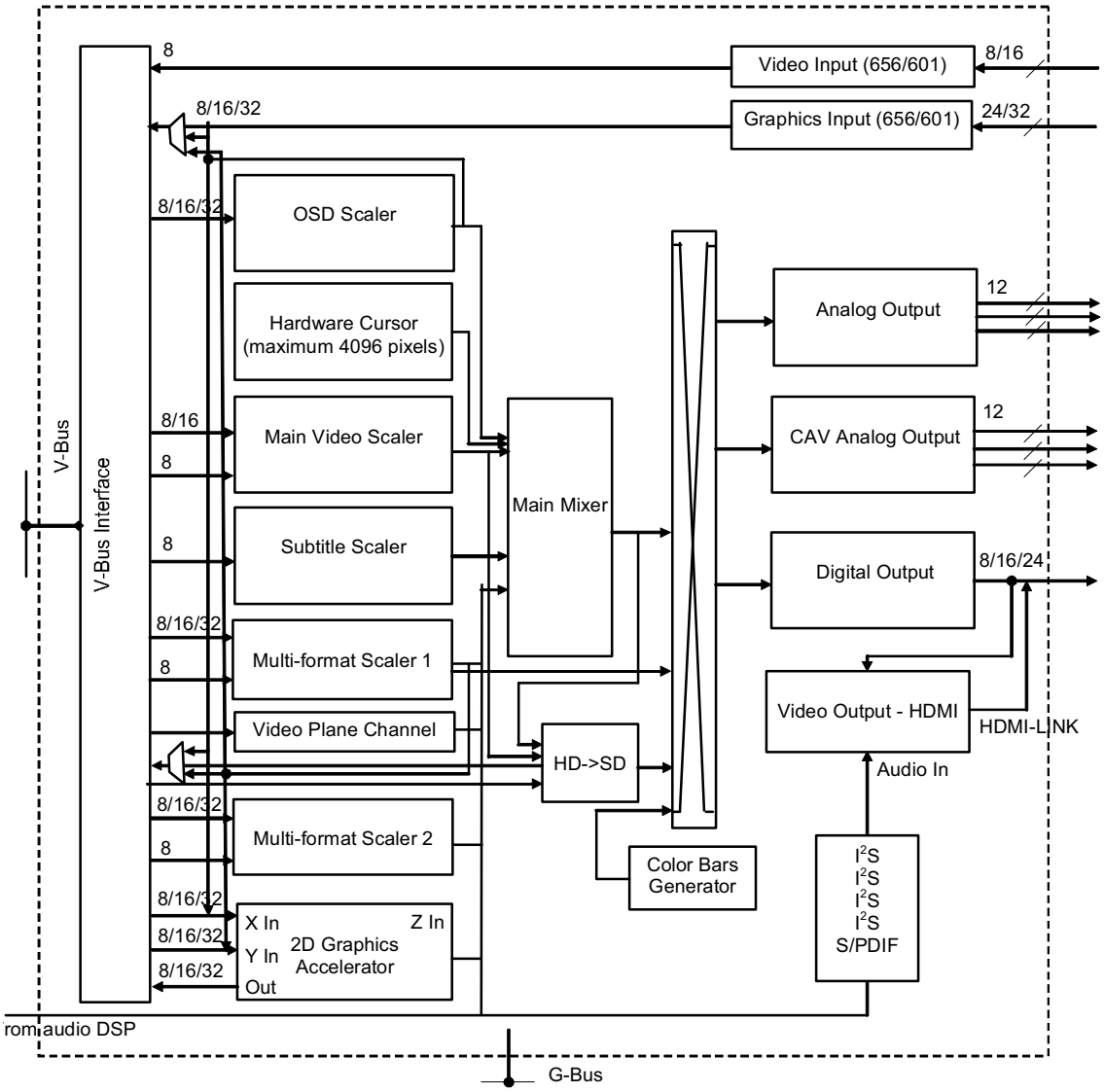

Figure 8-1 **Video processing subsystem block diagram**