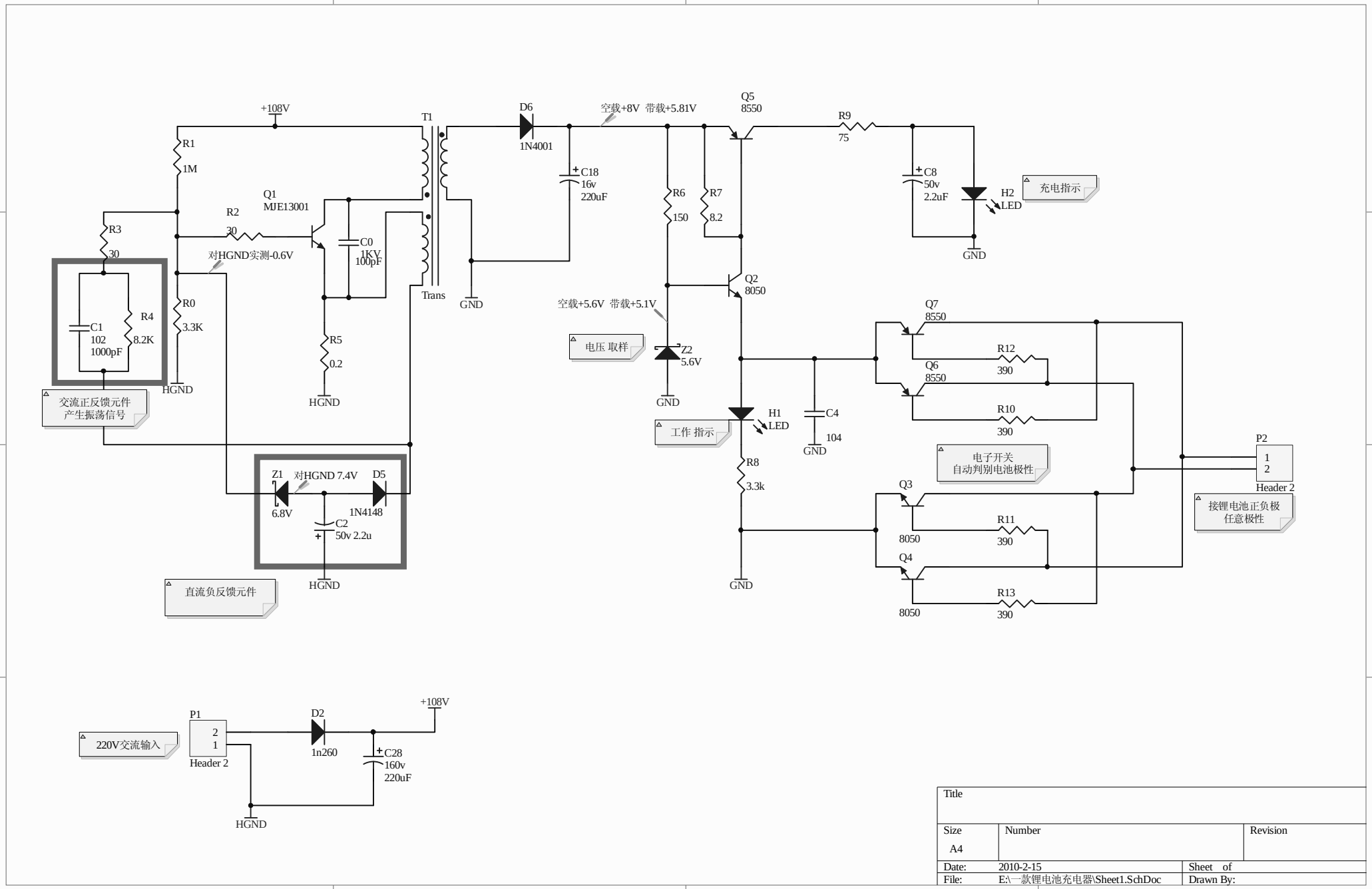

Title		
Size A4	Number	Revision
Date: 2010-2-15		Sheet of
File: E:\一款锂电池充电器\Sheet1.SchDoc		Drawn By: