REVNO	REVISION NOTE	DATE	DRAW	CHECK
A/0	RELEASED	09/10/25	黄家斌	

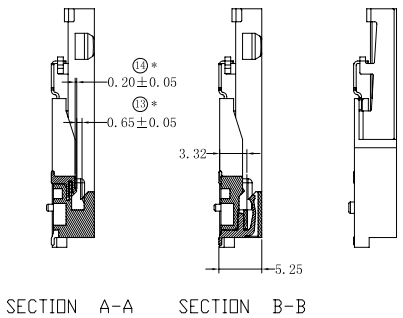

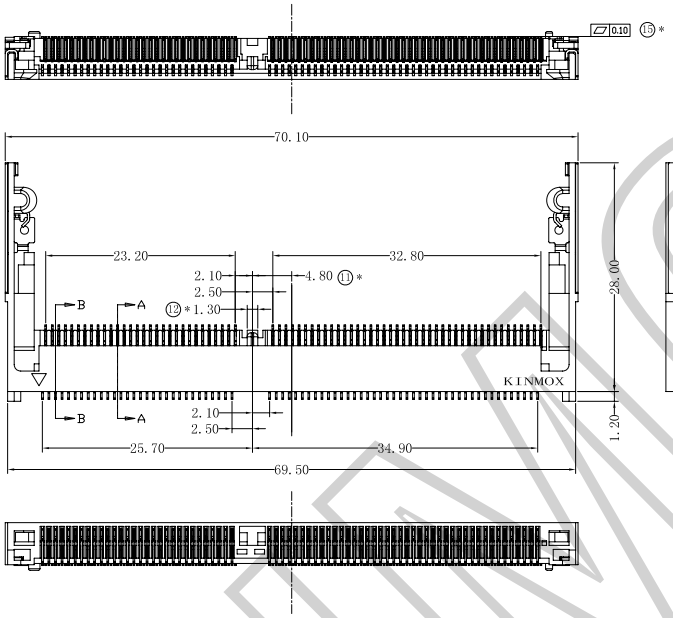

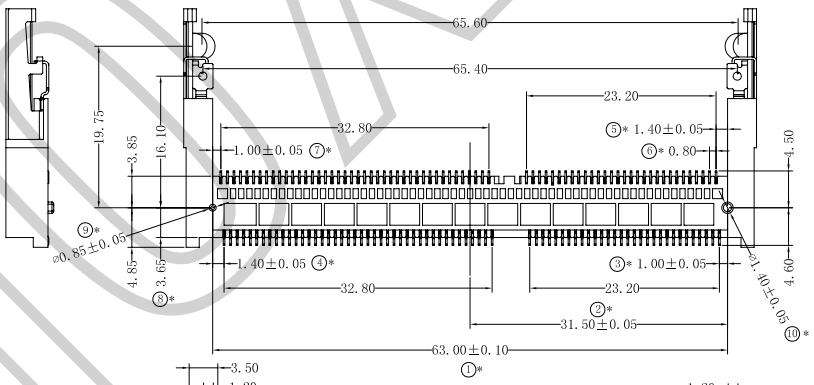

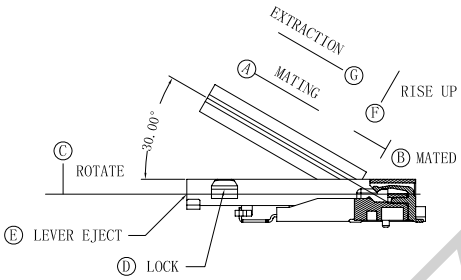

HOW TO MATE AND UNMATE

SETP 1:MATE PROCESS: Ⓐ -> Ⓑ -> Ⓒ -> Ⓓ

SETP 2:UNMATE PROCESS: Ⓔ -> Ⓕ -> Ⓖ

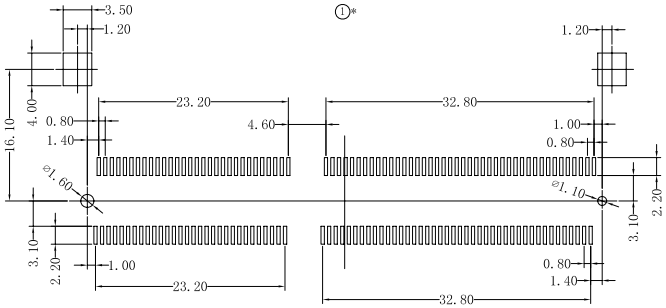

RECOMMEND P.C.B. LAYOUT

HOW TO MATE AND UNMATE

NOTES:

1. MATERIAL:
   - HOUSING:HIGH TEMP THERMO PLASTIC UL94V-0
   - CONTACT:COPPER ALLOY
   - LATCH: COPER ALLOY
2. FINISH:
   - CONTACT AREA:GOLD FLASH,ALL OVER 50U'' NICKEL.
   - SOLDERING AREA:GOLD FLASH,ALL OVER 50U'' NICKEL

DIMENSION UNIT MM		PROD. SPEC.	
TOLERANCE UNLESS OTHERWISE SPECIFIED		PKG. SPEC.	
.X±0.10	X°±1°	APR.	
.XX±0.05	.X°±0.5°	CHK.	
.XXX±0.03	.XX°±0.3°	DRA.	

金美電子有限公司
KINMOX Kinmox electronic co.,limited
www.kinmox.com 0755-89737484 Fax:0755-89737017

TITLE: 144P SODIMM-5.2H

PROJ.	PART_NUMBER: KMSO-02A-A-A0	
	FILE NO.	REV: A/0
	SHEET 1/1	SCALE: 1:1

KINMOX