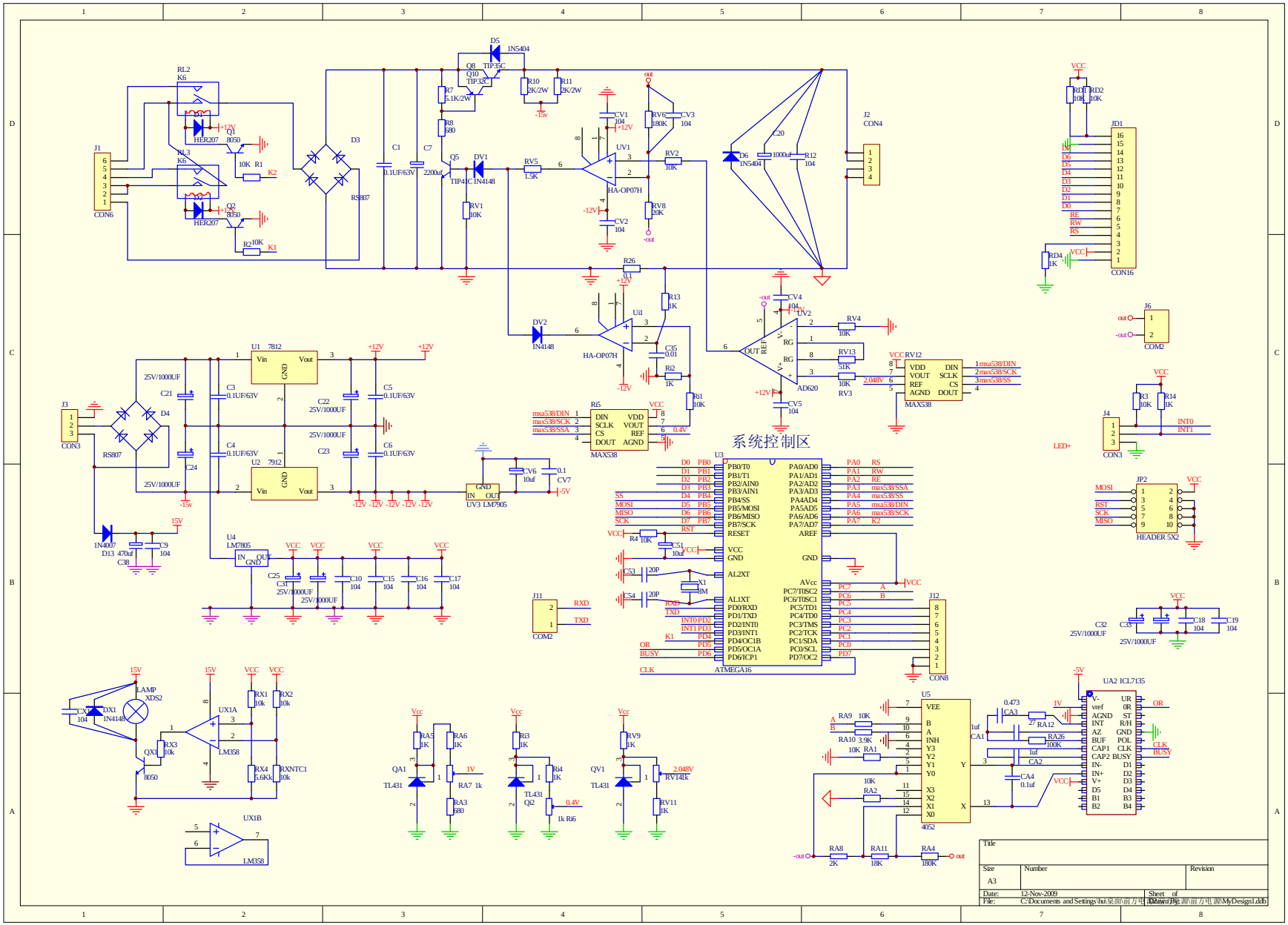

Title		
Size A3	Number	Revision
Date: 12-Nov-2009		Sheet of
File: C:\Documents and Settings\hu\桌面\前方电源\前方电源\MyDesign1.ddb		