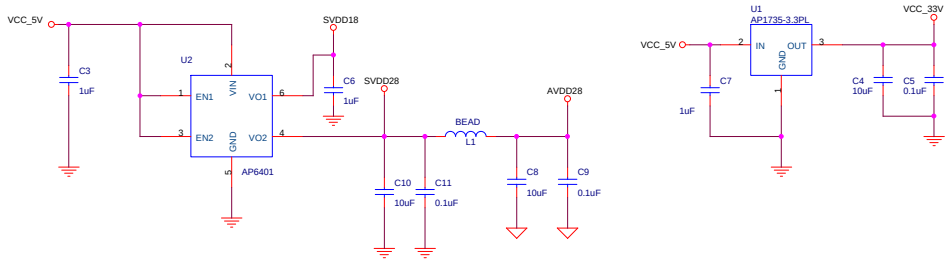

Note
GPIO0= EEPROM WP
GPIO1= LED
GPIO2=SENSOR Reset
GPIO3=PWDN
GPIO4=Snapshot

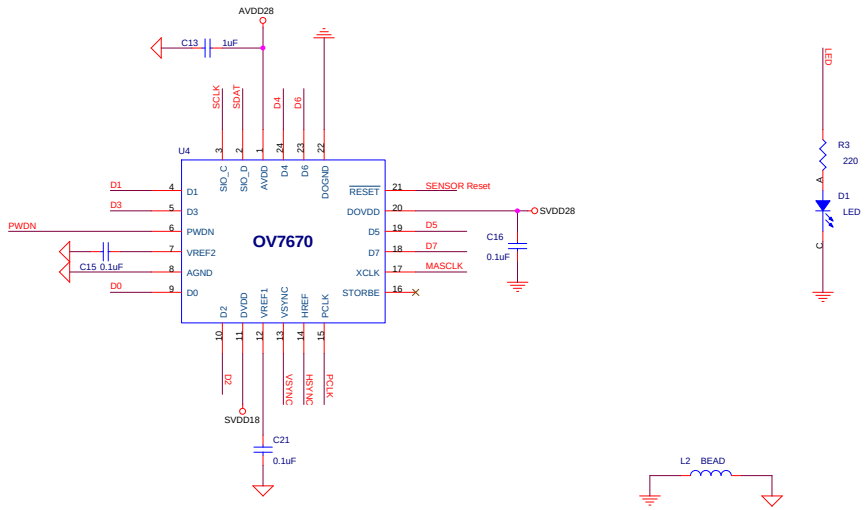

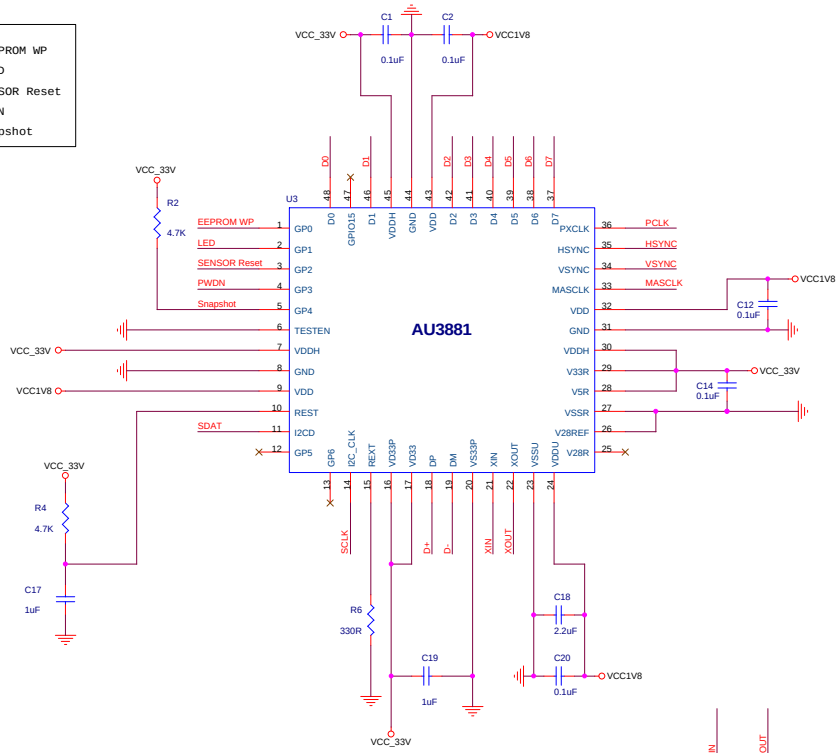

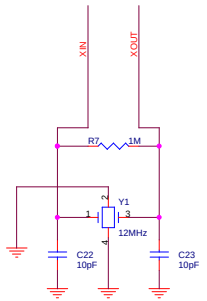

AU3881 + OV7670 NB MODULE BOARD V0.91

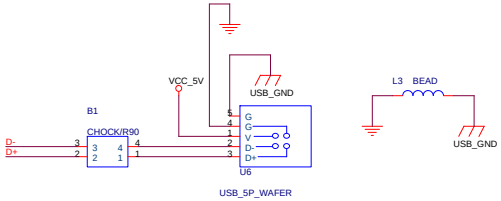

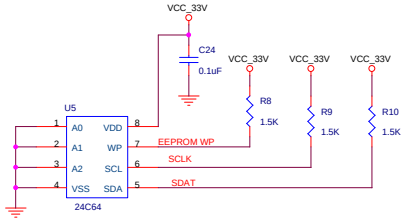

EEPROM SOP8

Alcor Micro ,Corp		
Title: AU3881 46PIN+OV7670 NB MODULE BOARD		
Size: C	Document Number: 3881-7670-081231-91	Rev: 0.91
Date: Thursday, March 05, 2009	Sheet 1 of 1	