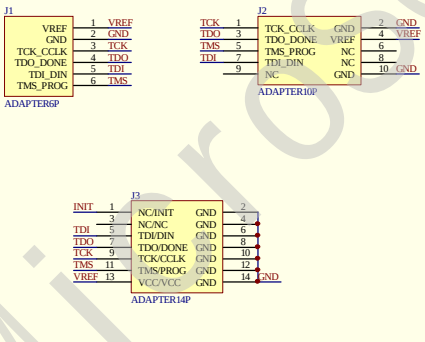

MicroSOPC

Title		
Size: B	Number	Revision
Date: 18-Oct-2009	Sheet of	
File: C:\Documents and Settings\lpy\桌面\20091017\Drawing\ADAPTER.Ddb		