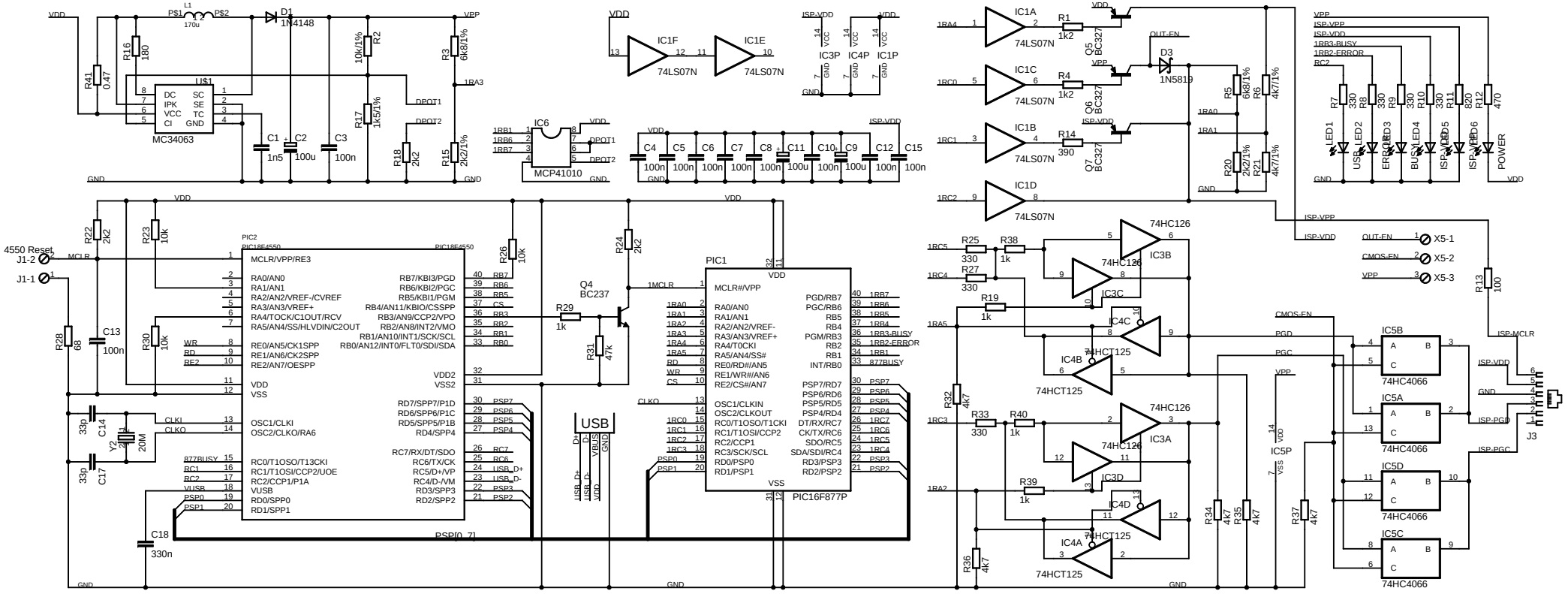
VDD
L1
P$1
P$2
170u
D1
1N4148
VPP
R16
180
R41
0.47
U$1
DC
SC
IPK
SE
VCC
TC
CI
GND
MC34063
C1
1n5
C2
100u
C3
100n
10k/1%
R2
R17
1k5/1%
R3
6k8/1%
1RA3
DPOT1
DPOT2
R18
2k2
R15
2k2/1%
GND
IC6
MCP41010
1RB1
1RB6
1RB7
C4
C5
C6
C7
C8
C11
C10
C9
C12
C15
100n
100u
IC1F
IC1E
74LS07N
ISP-VDD
IC3P
IC4P
IC1P
IC1A
IC1C
IC1B
IC1D
1RA4
1RC0
1RC1
1RC2
R1
1k2
R4
1k2
R14
390
Q5
BC327
Q6
BC327
Q7
BC327
OUT-EN
D3
1N5819
R5
6k8/1%
R6
4k7/1%
R20
2k2/1%
R21
4k7/1%
1RA0
1RA1
VPP
ISP-VPP
ISP-VDD
1RB3-BUSY
1RB2-ERROR
RC2
R7
330
R8
330
R9
330
R10
330
R11
820
R12
470
LED1
LED2
LED3
LED4
LED5
LED6
USB
ERROR
BUSY
ISP-VDD
ISP-VPP
POWER
R22
2k2
R23
10k
4550 Reset
J1-2
J1-1
MCLR
PIC2
PIC18F4550
MCLR/VPP/RE3
RA0/AN0
RA1/AN1
RA2/AN2/VREF-/CVREF
RA3/AN3/VREF+
RA4/TOCK/C1OUT/RCV
RA5/AN4/SS/HLVDIN/C2OUT
RE0/AN5/CK1SPP
RE1/AN6/CK2SPP
RE2/AN7/OESPP
VDD
VSS
OSC1/CLKI
OSC2/CLKO/RA6
RC0/T1OSO/T13CKI
RC1/T1OSI/CCP2/UOE
RC2/CCP1/P1A
VUSB
RD0/SPP0
RD1/SPP1
RB7/KBI3/PGD
RB6/KBI2/PGC
RB5/KBI1/PGM
RB4/AN11/KBIO/CSSPP
RB3/AN9/CCP2/VPO
RB2/AN8/INT2/VMO
RB1/AN10/INT1/SCK/SCL
RB0/AN12/INT0/FLT0/SDI/SDA
VDD2
VSS2
RD7/SPP7/P1D
RD6/SPP6/P1C
RD5/SPP5/P1B
RD4/SPP4
RC7/RX/DT/SDO
RC6/TX/CK
RC5/D+/VP
RC4/D-/VM
RD3/SPP3
RD2/SPP2
877BUSY
RC1
RC2
VUSB
PSP0
PSP1
PSP[0..7]
R28
68
C13
100n
R30
10k
C14
33p
C17
33p
Y2
20M
C18
330n
R26
10k
R24
2k2
Q4
BC237
R29
1k
R31
47k
USB
D+
D-
VBUS
GND
PIC1
PIC16F877P
MCLR#/VPP
RA0/AN0
RA1/AN1
RA2/AN2/VREF-
RA3/AN3/VREF+
RA4/T0CKI
RA5/AN4/SS#
RE0/RD#/AN5
RE1/WR#/AN6
RE2/CS#/AN7
OSC1/CLKIN
OSC2/CLKOUT
RC0/T1OSO/T1CKI
RC1/T1OSI/CCP2
RC2/CCP1
RC3/SCK/SCL
RD0/PSP0
RD1/PSP1
PGD/RB7
PGC/RB6
RB5
RB4
PGM/RB3
RB2
RB1
INT/RB0
PSP7/RD7
PSP6/RD6
PSP5/RD5
PSP4/RD4
DT/RX/RC7
CK/TX/RC6
SDO/RC5
SDA/SDI/RC4
RD3/PSP3
RD2/PSP2
1MCLR
CLKI
CLKO
1RB3-BUSY
1RB2-ERROR
877BUSY
R25
330
R38
1k
R27
330
R19
1k
R32
4k7
R33
330
R40
1k
R39
1k
R36
4k7
74HC126
IC3B
IC3C
IC4C
IC4B
74HCT125
IC3A
IC3D
IC4D
IC4A
R34
4k7
R35
4k7
R37
4k7
IC5P
CMOS-EN
PGD
PGC
VPP
IC5B
IC5A
IC5D
IC5C
74HC4066
X5-1
X5-2
X5-3
R13
100
ISP-MCLR
ISP-PGD
ISP-PGC
J3

Potyo 2006.09.07.

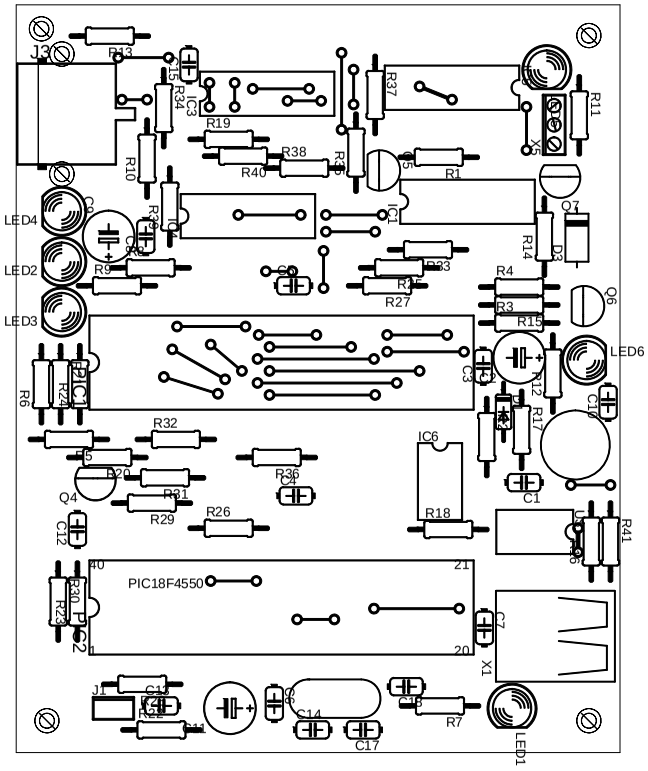
J3
R13
R34
IC3
R19
R38
R40
R10
R37
R11
X5
R1
Q7
IC1
R14
D3
LED4
LED2
LED3
R9
R33
R27
R4
R3
R15
Q6
LED6
R6
R22
R12
R17
C10
R32
IC6
R36
R20
Q4
R31
R29
R26
R18
C1
R41
C12
PIC18F4550
R30
R23
C7
X1
J1
C11
R25
R24
C14
C17
R7
LED1

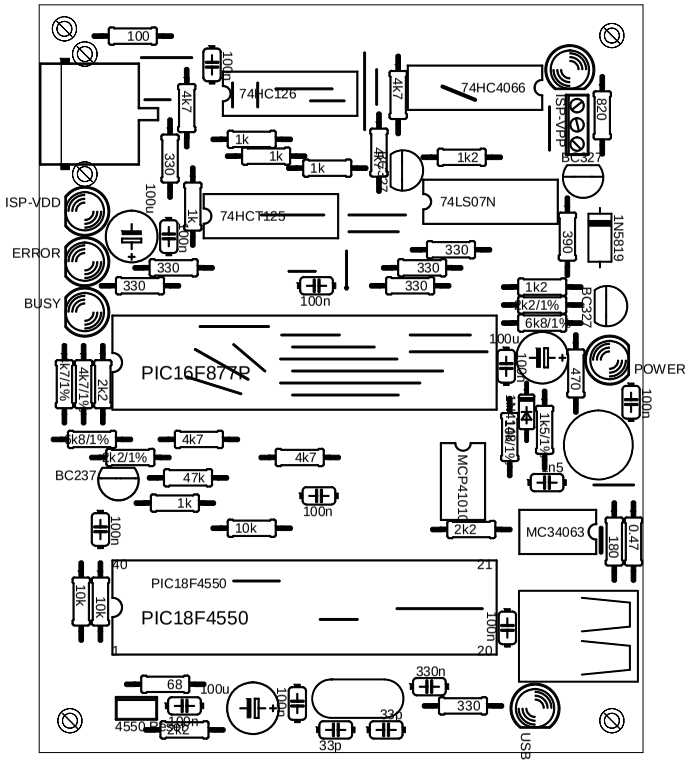
100
100n
74HC126
4k7
74HC4066
ISP-VPP
820
1k
1k
1k
4k7
1k2
BC327
320
100u
74HCT125
74LS07N
ISP-VDD
1k
100n
390
1N5819
ERROR
330
330
330
330
330
100n
1k2
1k2/1%
6k8/1%
BC327
BUSY
PIC16F877P
100u
100u
470
POWER
100n
k7/1%
4k7/1%
2k2
1k/1%
6k8/1%
4k7
4k7
k2/1%
BC237
47k
1k
100n
MCP4101
2k2
MC34063
180
0.47
100n
10k
PIC18F4550
PIC18F4550
10k
10k
100n
68
100u
100n
330n
330
330
4550
2k2
33p
USB