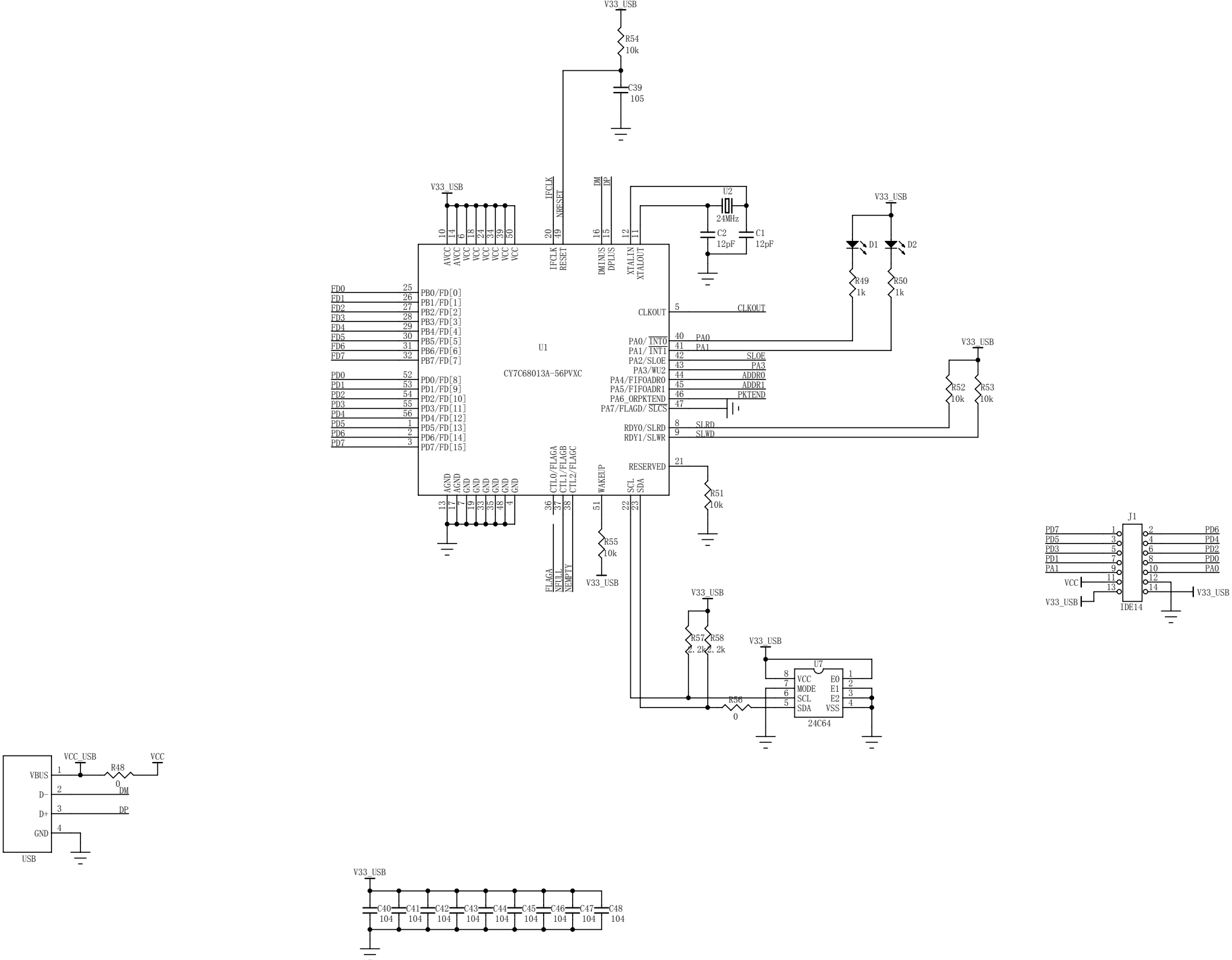
V33_USB
R54
10k
C39
105
IFCLK
NRESET
DM
DP
U2
24MHz
C2
12pF
C1
12pF
D1
D2
R49
1k
R50
1k
AVCC
VCC
IFCLK
RESET
DMINUS
DPLUS
XTALIN
XTALOUT
U1
CY7C68013A-56PVXC
FD0
FD1
FD2
FD3
FD4
FD5
FD6
FD7
PB0/FD[0]
PB1/FD[1]
PB2/FD[2]
PB3/FD[3]
PB4/FD[4]
PB5/FD[5]
PB6/FD[6]
PB7/FD[7]
PD0
PD1
PD2
PD3
PD4
PD5
PD6
PD7
PD0/FD[8]
PD1/FD[9]
PD2/FD[10]
PD3/FD[11]
PD4/FD[12]
PD5/FD[13]
PD6/FD[14]
PD7/FD[15]
CLKOUT
PA0/INT0
PA1/INT1
PA2/SLOE
PA3/WU2
PA4/FIFOADR0
PA5/FIFOADR1
PA6_ORPKTEND
PA7/FLAGD/SLCS
RDY0/SLRD
RDY1/SLWR
RESERVED
R52
10k
R53
10k
R51
10k
AGND
GND
CTL0/FLAGA
CTL1/FLAGB
CTL2/FLAGC
WAKEUP
SCL
SDA
R55
10k
FLAGA
NFULL
NEMPTY
R57
2.2k
R58
2.2k
R56
0
U7
VCC
MODE
SCL
SDA
E0
E1
E2
VSS
24C64
J1
IDE14
VCC
VBUS
D-
D+
GND
USB
VCC_USB
R48
0
DM
DP
C40
C41
C42
C43
C44
C45
C46
C47
C48
104

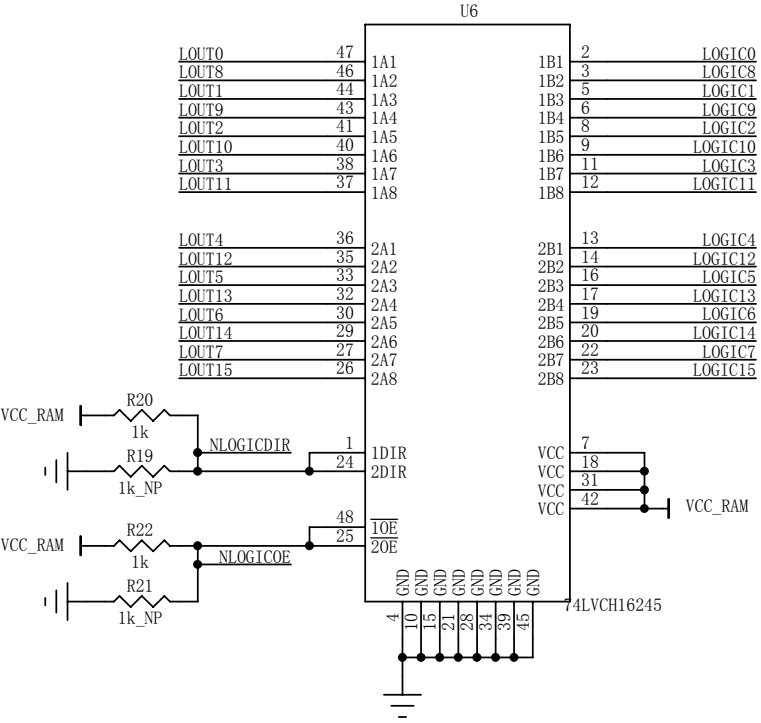
U6
LOUT0 47 1A1
LOUT8 46 1A2
LOUT1 44 1A3
LOUT9 43 1A4
LOUT2 41 1A5
LOUT10 40 1A6
LOUT3 38 1A7
LOUT11 37 1A8
LOUT4 36 2A1
LOUT12 35 2A2
LOUT5 33 2A3
LOUT13 32 2A4
LOUT6 30 2A5
LOUT14 29 2A6
LOUT7 27 2A7
LOUT15 26 2A8
1B1 2 LOGIC0
1B2 3 LOGIC8
1B3 5 LOGIC1
1B4 6 LOGIC9
1B5 8 LOGIC2
1B6 9 LOGIC10
1B7 11 LOGIC3
1B8 12 LOGIC11
2B1 13 LOGIC4
2B2 14 LOGIC12
2B3 16 LOGIC5
2B4 17 LOGIC13
2B5 19 LOGIC6
2B6 20 LOGIC14
2B7 22 LOGIC7
2B8 23 LOGIC15
VCC_RAM
R20 1k
R19 1k_NP
NLOGICDIR
1 1DIR
24 2DIR
VCC 7
VCC 18
VCC 31
VCC 42
VCC_RAM
48 1OE
25 2OE
R22 1k
R21 1k_NP
NLOGICOE
GND 4
GND 10
GND 15
GND 21
GND 28
GND 34
GND 39
GND 45
74LVCH16245

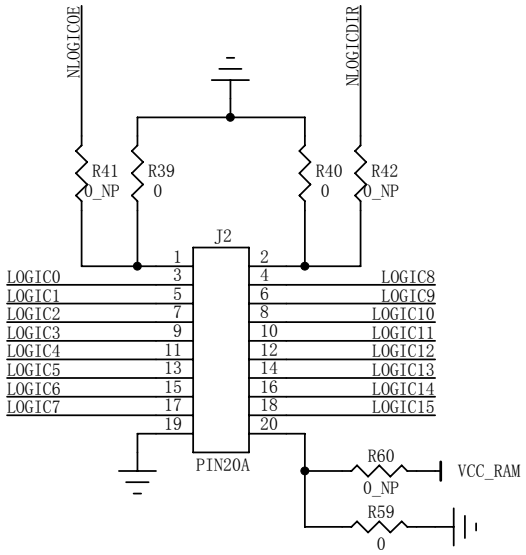
NLOGICOE
NLOGICDIR
R41 0_NP
R39 0
R40 0
R42 0_NP
J2
LOGIC0 3 1
LOGIC1 5
LOGIC2 7
LOGIC3 9
LOGIC4 11
LOGIC5 13
LOGIC6 15
LOGIC7 17
19
2 LOGIC8
4
6 LOGIC9
8 LOGIC10
10 LOGIC11
12 LOGIC12
14 LOGIC13
16 LOGIC14
18 LOGIC15
20
PIN20A
R60 0_NP
VCC_RAM
R59 0

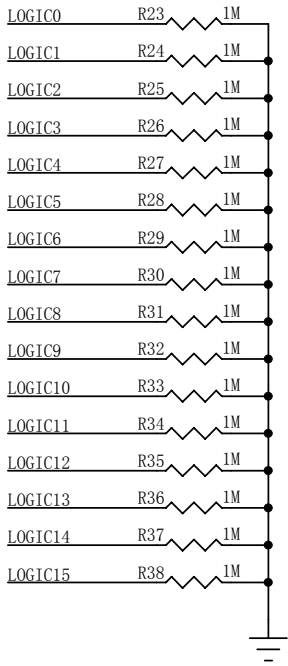
LOGIC0 R23 1M
LOGIC1 R24 1M
LOGIC2 R25 1M
LOGIC3 R26 1M
LOGIC4 R27 1M
LOGIC5 R28 1M
LOGIC6 R29 1M
LOGIC7 R30 1M
LOGIC8 R31 1M
LOGIC9 R32 1M
LOGIC10 R33 1M
LOGIC11 R34 1M
LOGIC12 R35 1M
LOGIC13 R36 1M
LOGIC14 R37 1M
LOGIC15 R38 1M

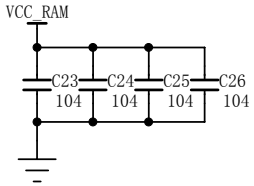
VCC_RAM
C23 104
C24 104
C25 104
C26 104

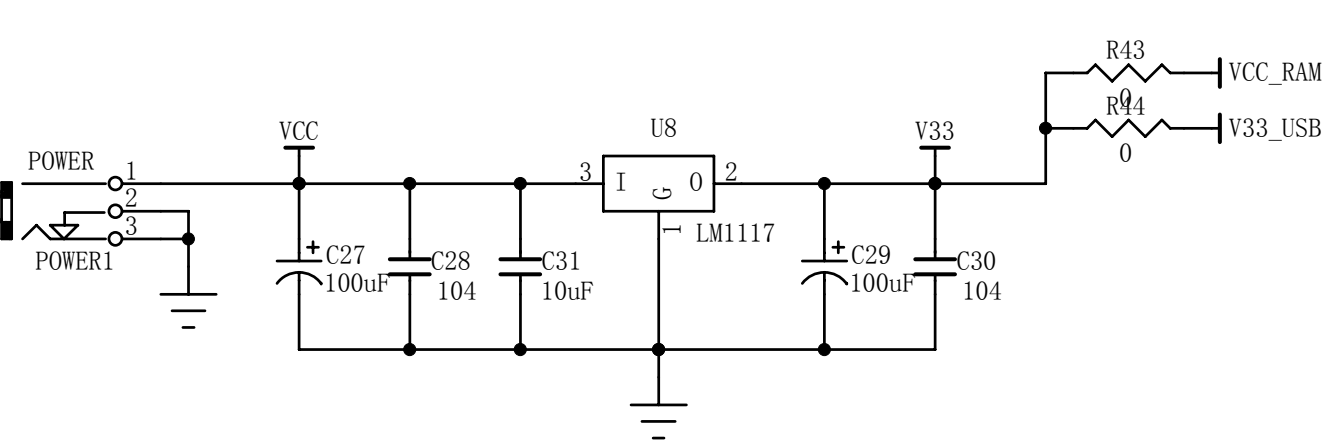
POWER
1
2
3
POWER1
VCC
C27
100uF
C28
104
C31
10uF
U8
3
I
G
0
2
1
LM1117
V33
C29
100uF
C30
104
R43
0
R44
0
VCC_RAM
V33_USB

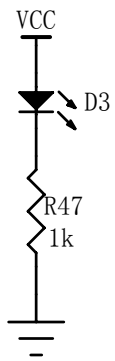
VCC
D3
R47
1k

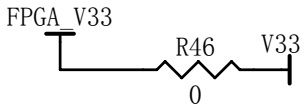
FPGA_V33
R46
0
V33

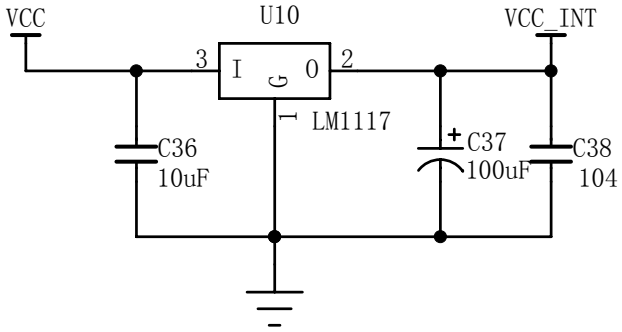
VCC
U10
3
I
G
0
2
1
LM1117
VCC_INT
C36
10uF
C37
100uF
C38
104

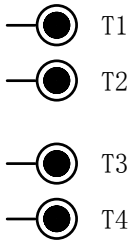
T1
T2
T3
T4

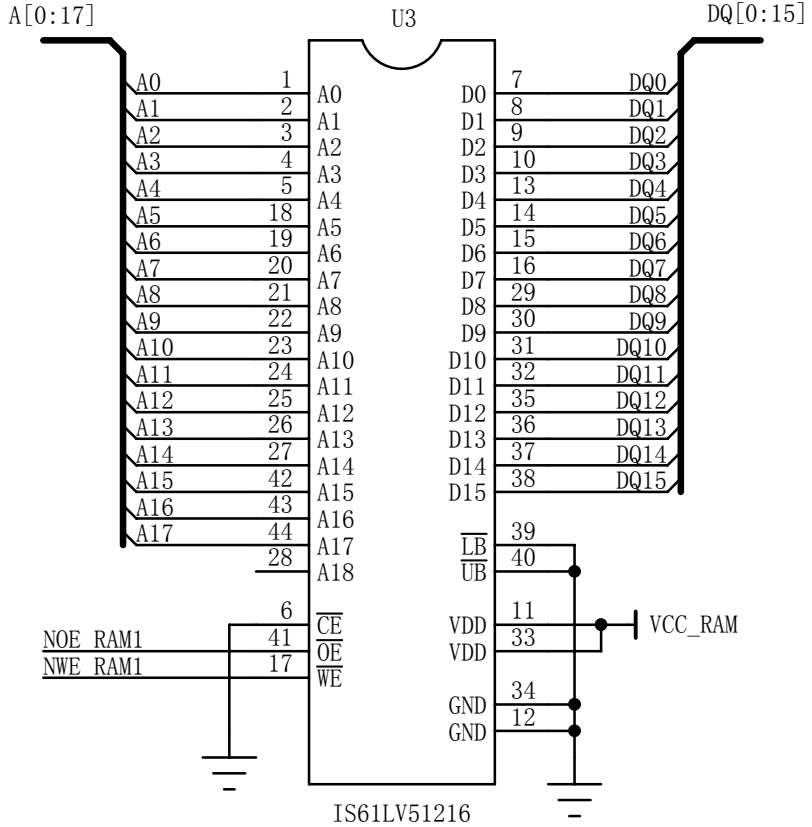
A[0:17]
U3
DQ[0:15]
A0 1
A1 2
A2 3
A3 4
A4 5
A5 18
A6 19
A7 20
A8 21
A9 22
A10 23
A11 24
A12 25
A13 26
A14 27
A15 42
A16 43
A17 44
28
A0
A1
A2
A3
A4
A5
A6
A7
A8
A9
A10
A11
A12
A13
A14
A15
A16
A17
A18
D0 7 DQ0
D1 8 DQ1
D2 9 DQ2
D3 10 DQ3
D4 13 DQ4
D5 14 DQ5
D6 15 DQ6
D7 16 DQ7
D8 29 DQ8
D9 30 DQ9
D10 31 DQ10
D11 32 DQ11
D12 35 DQ12
D13 36 DQ13
D14 37 DQ14
D15 38 DQ15
LB 39
UB 40
6 CE
NOE_RAM1 41 OE
NWE_RAM1 17 WE
VDD 11
VDD 33
VCC_RAM
GND 34
GND 12
IS61LV51216

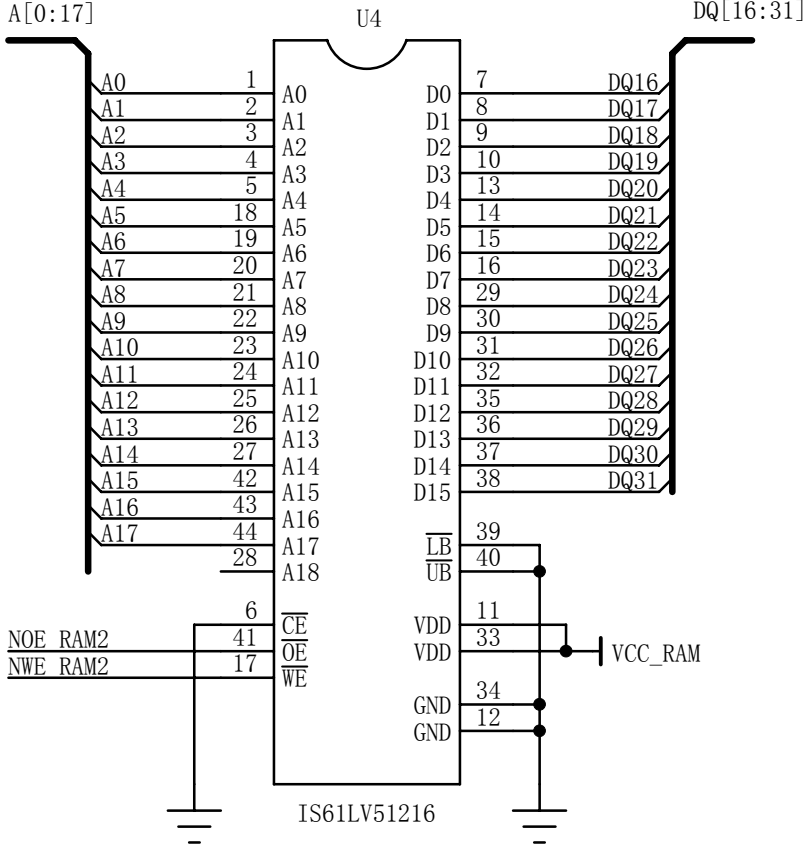
A[0:17]
U4
DQ[16:31]
A0 1
A1 2
A2 3
A3 4
A4 5
A5 18
A6 19
A7 20
A8 21
A9 22
A10 23
A11 24
A12 25
A13 26
A14 27
A15 42
A16 43
A17 44
28
A0
A1
A2
A3
A4
A5
A6
A7
A8
A9
A10
A11
A12
A13
A14
A15
A16
A17
A18
D0 7 DQ16
D1 8 DQ17
D2 9 DQ18
D3 10 DQ19
D4 13 DQ20
D5 14 DQ21
D6 15 DQ22
D7 16 DQ23
D8 29 DQ24
D9 30 DQ25
D10 31 DQ26
D11 32 DQ27
D12 35 DQ28
D13 36 DQ29
D14 37 DQ30
D15 38 DQ31
LB 39
UB 40
6 CE
NOE_RAM2 41 OE
NWE_RAM2 17 WE
VDD 11
VDD 33
VCC_RAM
GND 34
GND 12
IS61LV51216

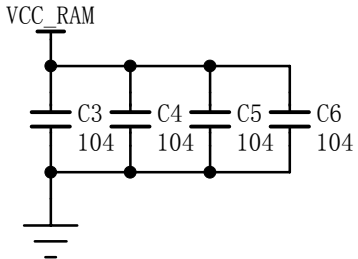
VCC_RAM
C3
104
C4
104
C5
104
C6
104

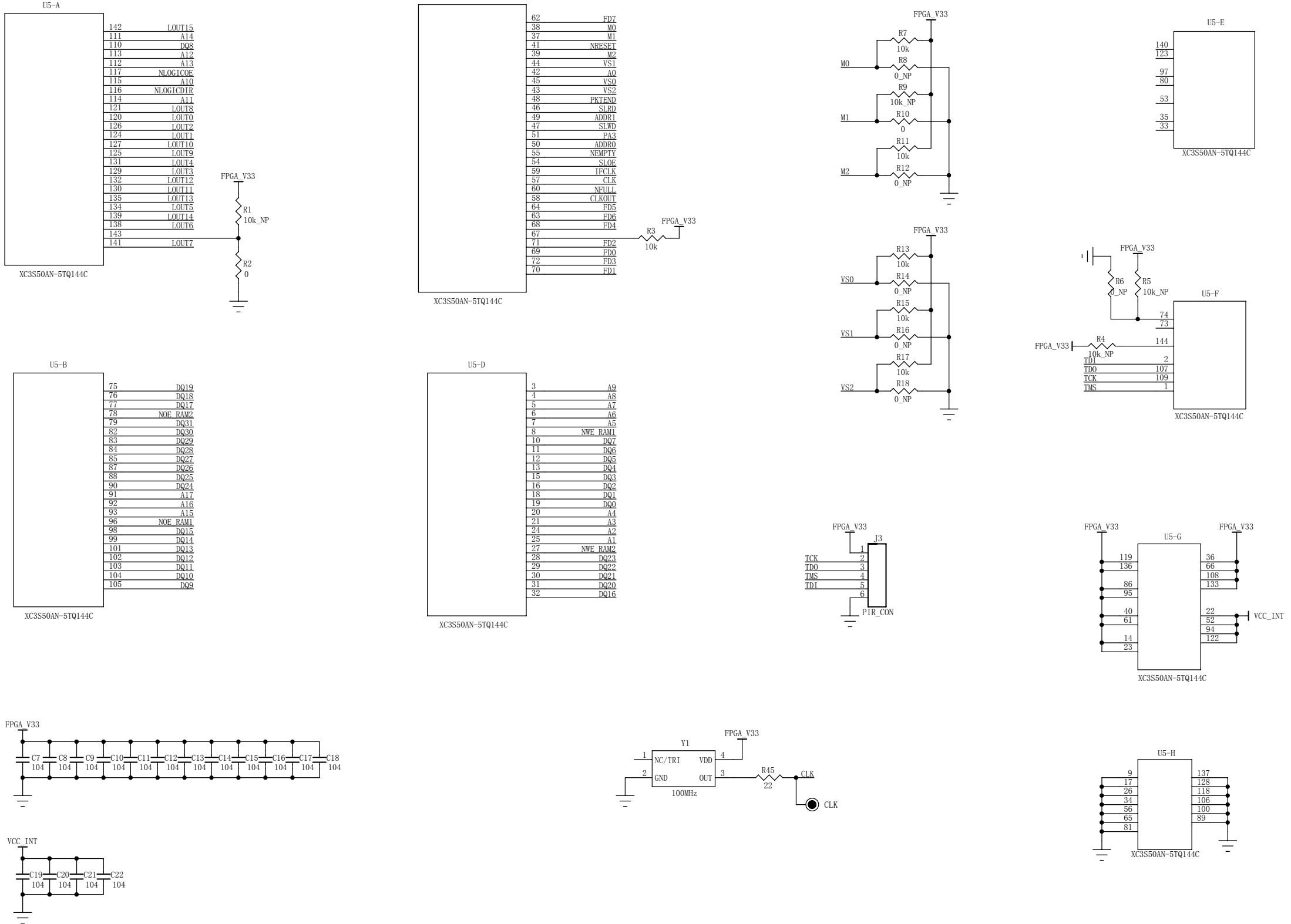
U5-A
142 LOUT15
111 A14
110 DQ8
113 A12
112 A13
117 NLOGICOE
115 A10
116 NLOGICDIR
114 A11
121 LOUT8
120 LOUT0
126 LOUT2
124 LOUT1
127 LOUT10
125 LOUT9
131 LOUT4
129 LOUT3
132 LOUT12
130 LOUT11
135 LOUT13
134 LOUT5
139 LOUT14
138 LOUT6
143
141 LOUT7
XC3S50AN-5TQ144C
FPGA_V33
R1
10k_NP
R2
0
U5-C
62 FD7
38 M0
37 M1
41 NRESET
39 M2
44 VS1
42 A0
45 VS0
43 VS2
48 PKTEND
46 SLRD
49 ADDR1
47 SLWD
51 PA3
50 ADDR0
55 NEMPTY
54 SLOE
59 IFCLK
57 CLK
60 NFULL
58 CLKOUT
64 FD5
63 FD6
68 FD4
67
71 FD2
69 FD0
72 FD3
70 FD1
XC3S50AN-5TQ144C
FPGA_V33
R3
10k
FPGA_V33
R7
10k
M0
R8
0_NP
R9
10k_NP
M1
R10
0
R11
10k
M2
R12
0_NP
U5-E
140
123
97
80
53
35
33
XC3S50AN-5TQ144C
FPGA_V33
R13
10k
VS0
R14
0_NP
R15
10k
VS1
R16
0_NP
R17
10k
VS2
R18
0_NP
FPGA_V33
R6
0_NP
R5
10k_NP
U5-F
74
73
FPGA_V33
R4
10k_NP
144
TDI 2
TDO 107
TCK 109
TMS 1
XC3S50AN-5TQ144C
U5-B
75 DQ19
76 DQ18
77 DQ17
78 NOE_RAM2
79 DQ31
82 DQ30
83 DQ29
84 DQ28
85 DQ27
87 DQ26
88 DQ25
90 DQ24
91 A17
92 A16
93 A15
96 NOE_RAM1
98 DQ15
99 DQ14
101 DQ13
102 DQ12
103 DQ11
104 DQ10
105 DQ9
XC3S50AN-5TQ144C
U5-D
3 A9
4 A8
5 A7
6 A6
7 A5
8 NWE_RAM1
10 DQ7
11 DQ6
12 DQ5
13 DQ4
15 DQ3
16 DQ2
18 DQ1
19 DQ0
20 A4
21 A3
24 A2
25 A1
27 NWE_RAM2
28 DQ23
29 DQ22
30 DQ21
31 DQ20
32 DQ16
XC3S50AN-5TQ144C
FPGA_V33
J3
1
TCK 2
TDO 3
TMS 4
TDI 5
6
PIR_CON
FPGA_V33
U5-G
FPGA_V33
119
136
86
95
40
61
14
23
36
66
108
133
22
52
94
122
VCC_INT
XC3S50AN-5TQ144C
FPGA_V33
C7 104
C8 104
C9 104
C10 104
C11 104
C12 104
C13 104
C14 104
C15 104
C16 104
C17 104
C18 104
Y1
1 NC/TRI
2 GND
VDD 4
OUT 3
100MHz
FPGA_V33
R45
22
CLK
CLK
U5-H
9
17
26
34
56
65
81
137
128
118
106
100
89
XC3S50AN-5TQ144C
VCC_INT
C19 104
C20 104
C21 104
C22 104