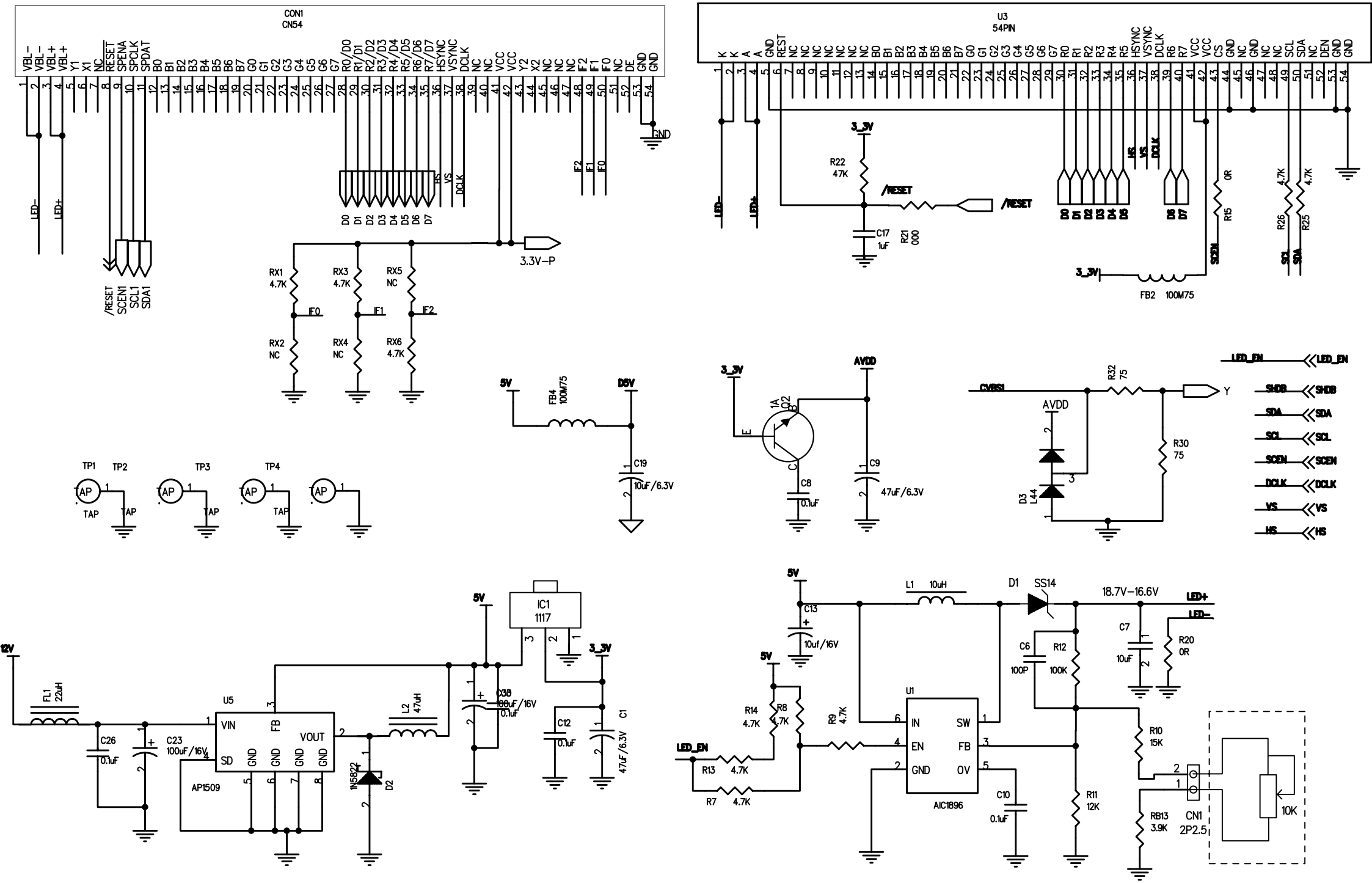
CON1
CN54
U3
54PIN
3.3V-P
/RESET
SCEN1
SCL1
SDA1
RX1 4.7K
RX2 NC
RX3 4.7K
RX4 NC
RX5 NC
RX6 4.7K
IF0
IF1
IF2
R22 47K
C17 1uF
R21 000
FB2 100M75
R15 0R
R26 4.7K
R25 4.7K
FB4 100M75
C19 10uF/6.3V
C8 0.1uF
C9 47uF/6.3V
R32 75
R30 75
D3 L44
CVBS1
AVDD
LED_EN
SHDB
SDA
SCL
SCEN
DCLK
VS
HS
TP1
TP2
TP3
TP4
TAP
IC1 1117
FL1 22uH
U5
AP1509
VIN
FB
VOUT
SD
GND
C26 0.1uF
C23 100uF/16V
L2 47uH
1N5822
D2
C30 100uF/16V
0.1uF
C12 0.1uF
C1 47uF/6.3V
12V
5V
3_3V
L1 10uH
D1 SS14
18.7V-16.6V
LED+
LED-
C13 10uf/16V
C6 100P
R12 100K
C7 10uF
R20 0R
R14 4.7K
R8 4.7K
R9 4.7K
R13 4.7K
R7 4.7K
U1
AIC1896
IN
EN
GND
SW
FB
OV
C10 0.1uF
R11 12K
R10 15K
RB13 3.9K
CN1 2P2.5
10K

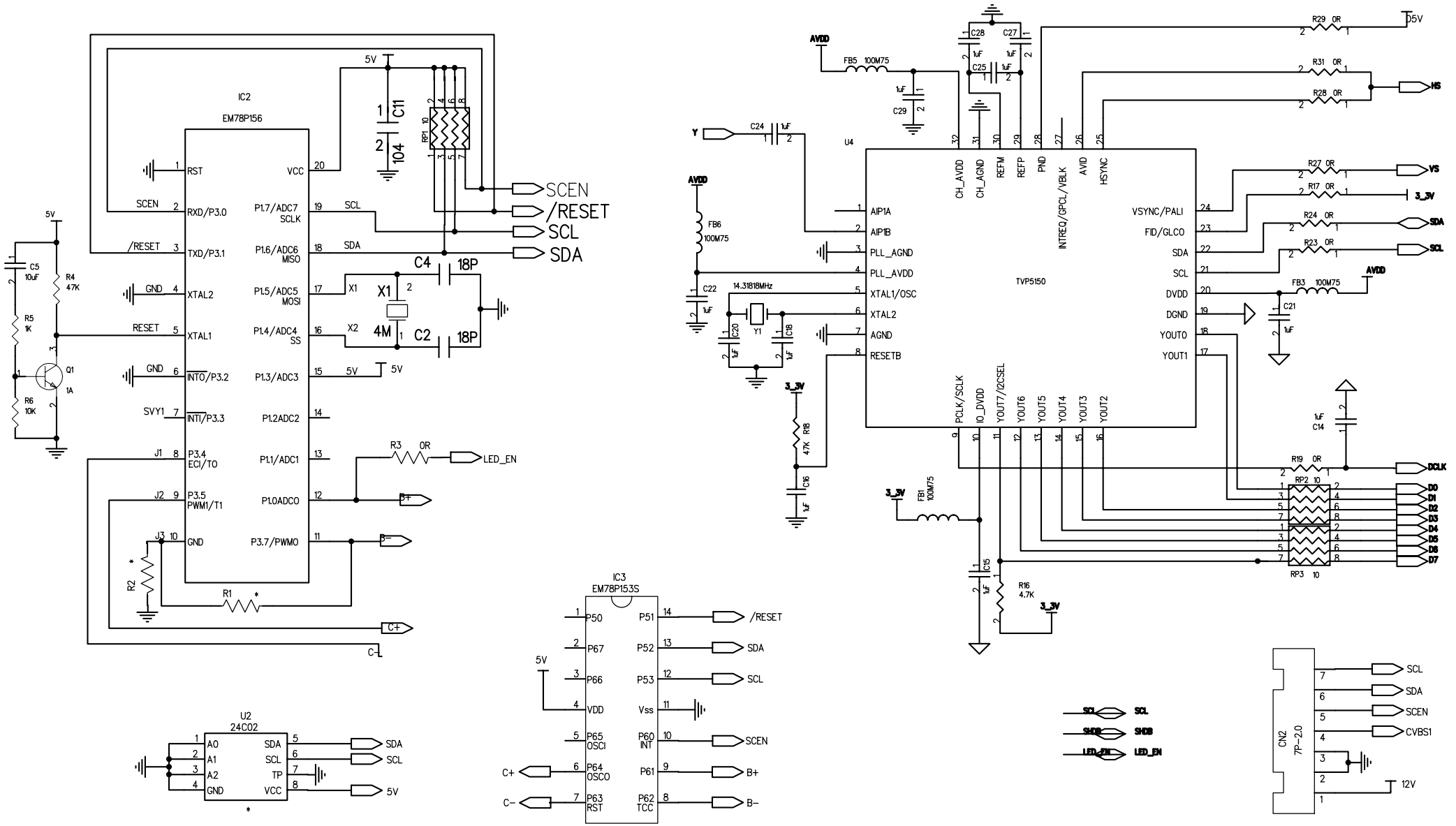

Title		
Size B	Document Number	Rev ?
Date: Monday, July 21, 2008	Sheet 2 of 2	