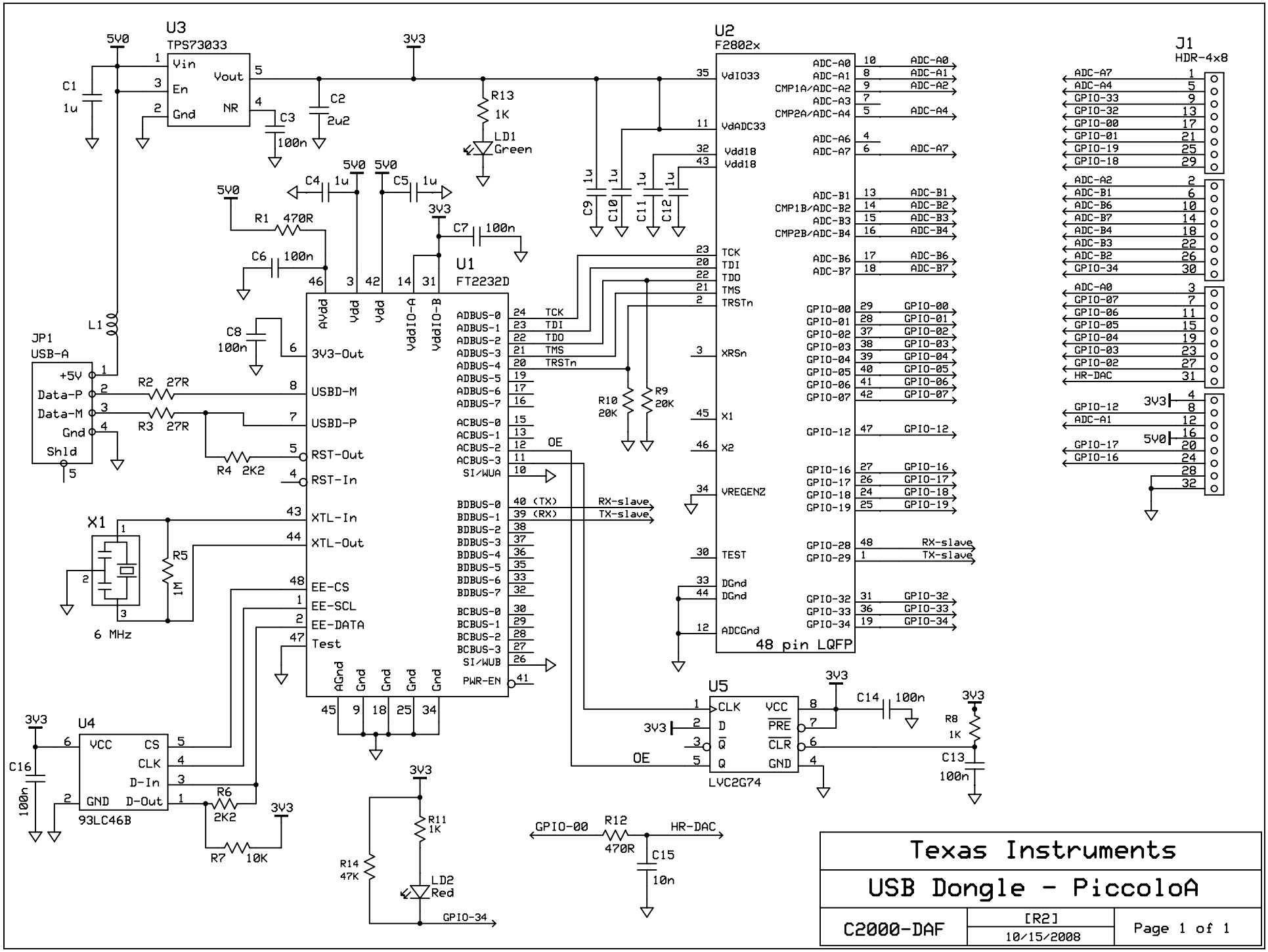
U3
TPS73033
Vin
En
Gnd
Vout
NR
C1
1u
C2
2u2
C3
100n
5V0
3V3
R13
1K
LD1
Green
U2
F2802x
VdIO33
VdADC33
Vdd18
Vdd18
ADC-A0
ADC-A1
CMP1A/ADC-A2
ADC-A3
CMP2A/ADC-A4
ADC-A6
ADC-A7
ADC-B1
CMP1B/ADC-B2
ADC-B3
CMP2B/ADC-B4
ADC-B6
ADC-B7
TCK
TDI
TDO
TMS
TRSTn
XRSn
X1
X2
VREGENZ
TEST
DGnd
DGnd
ADCGnd
GPIO-00
GPIO-01
GPIO-02
GPIO-03
GPIO-04
GPIO-05
GPIO-06
GPIO-07
GPIO-12
GPIO-16
GPIO-17
GPIO-18
GPIO-19
GPIO-28
GPIO-29
GPIO-32
GPIO-33
GPIO-34
RX-slave
TX-slave
48 pin LQFP
J1
HDR-4x8
ADC-A7
ADC-A4
GPIO-33
GPIO-32
GPIO-00
GPIO-01
GPIO-19
GPIO-18
ADC-A2
ADC-B1
ADC-B6
ADC-B7
ADC-B4
ADC-B3
ADC-B2
GPIO-34
ADC-A0
GPIO-07
GPIO-06
GPIO-05
GPIO-04
GPIO-03
GPIO-02
HR-DAC
GPIO-12
ADC-A1
GPIO-17
GPIO-16
C4
1u
C5
1u
C6
100n
C7
100n
C8
100n
C9
1u
C10
1u
C11
1u
C12
1u
R1
470R
R2
27R
R3
27R
R4
2K2
R5
1M
R9
20K
R10
20K
U1
FT2232D
AVdd
Vdd
Vdd
VddIO-A
VddIO-B
3V3-Out
USBD-M
USBD-P
RST-Out
RST-In
XTL-In
XTL-Out
EE-CS
EE-SCL
EE-DATA
Test
ADBUS-0
ADBUS-1
ADBUS-2
ADBUS-3
ADBUS-4
ADBUS-5
ADBUS-6
ADBUS-7
ACBUS-0
ACBUS-1
ACBUS-2
ACBUS-3
SI/WUA
BDBUS-0 (TX)
BDBUS-1 (RX)
BDBUS-2
BDBUS-3
BDBUS-4
BDBUS-5
BDBUS-6
BDBUS-7
BCBUS-0
BCBUS-1
BCBUS-2
BCBUS-3
SI/WUB
PWR-EN
AGnd
Gnd
Gnd
Gnd
Gnd
JP1
USB-A
+5V
Data-P
Data-M
Gnd
Shld
L1
X1
6 MHz
U4
93LC46B
VCC
CS
CLK
D-In
GND
D-Out
C16
100n
R6
2K2
R7
10K
R11
1K
R14
47K
LD2
Red
GPIO-34
U5
LVC2G74
CLK
D
Q
Q
VCC
PRE
CLR
GND
OE
C14
100n
R8
1K
C13
100n
GPIO-00
R12
470R
HR-DAC
C15
10n
Texas Instruments
USB Dongle - PiccoloA
C2000-DAF
[R2]
10/15/2008
Page 1 of 1