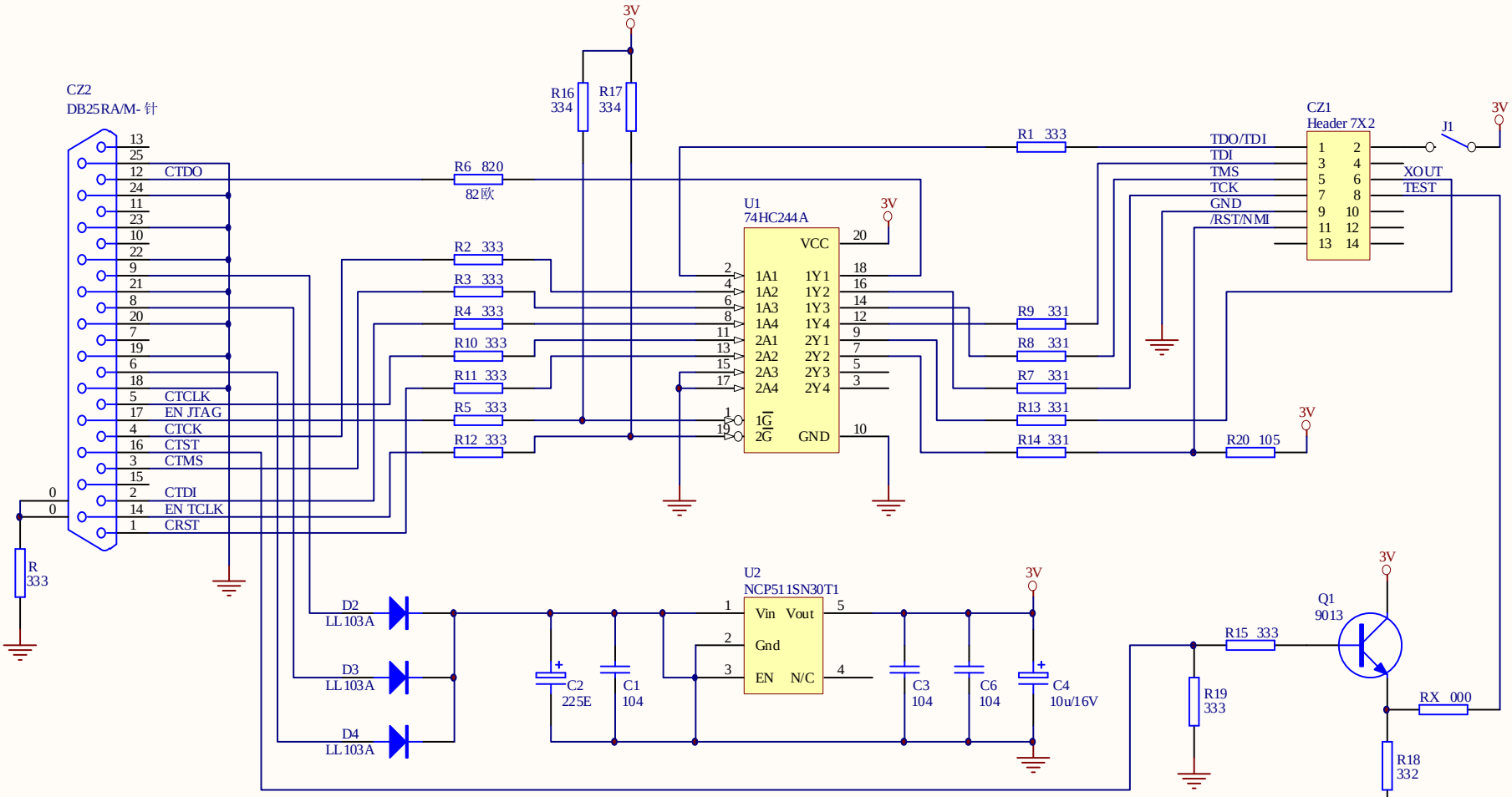

Supported devices: All MSP430Fxxx flash microcontrollers

Title	MSP430-JTAG-wh	
Size A4	Number	Revision
Date: 2009-4-28		Sheet of
File: D:\我的文档\..\MSP430-JTAG.SchDoc		Drawn By: