AN592

Frequency Counter Using PIC16C5X

Author: *Stan D'Souza*
Microchip Technology Inc.

INTRODUCTION

The PIC16C5X has one 8-bit timer (Timer0), which can be used with an 8-bit prescaler. The prescaler runs asynchronously, hence it can count a very high frequency. The minimum rise and fall times of the input frequency are specified to be 10 ns, so the fastest clock rate the TMR0 can count is 50 MHz. The prescaler must be used when measuring high frequency. Since the prescaler can be configured as a divide by 256 counter, the maximum resolution at which the input frequency can be measured is 16-bits. However, the prescaler cannot be directly read like a file register. This application note depicts a unique method by which the user can "extract" the 8-bit value in the prescaler, whereby the resolution of the measurement is 16-bits with the high 8-bits in TMR0 and the low 8-bits in the prescaler.

IMPLEMENTATION

A frequency counter which can read frequencies from 50 Hz to 50 MHz was implemented in this application note in order to demonstrate this method of measuring the 16-bit counter value from the prescaler and TMR0.

The basic hardware for the measurement circuit is depicted in Figure 1. It consists of the frequency input at TMR0 or T0CKI (pin 3 in a PIC16C54). T0CKI is connected to RA2. The input frequency is connected to T0CKI through a 470Ω resistor.

FIGURE 1:

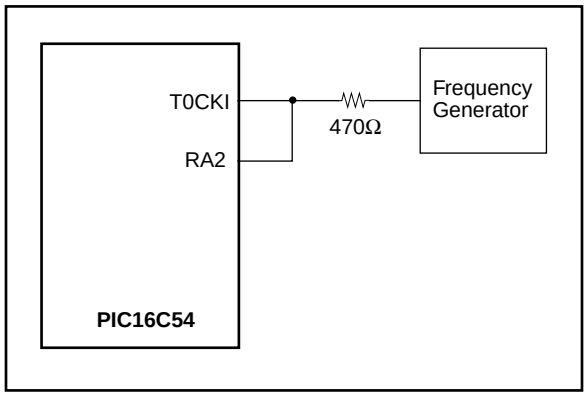

TMR0 is configured to measure the input frequency, at T0CKI of the PIC16C54. The input frequency is "gated" for a precise duration of time. Before starting this precise "gate", TMR0 is cleared (which also clears the prescaler), and the RA2 pin is configured as an input. The precise "gate" is implemented in software as an accurate delay. At the end of the delay, the RA2 pin is configured as an output going low. This will cause the input to TMR0 to be "halted" or "stopped". A 16-bit value of the input frequency is now saved in TMR0 and the 8-bit prescaler. The high 8 bits are in TMR0 and can be easily read. The low 8 bits have to be "shifted out". The 8 bits in the prescaler are "shifted out" by toggling RA2 with a "BSF" and a "BCF" instruction. After every toggle, the value in TMR0 is checked to see if TMR0 has incremented. If the number of toggles required to cause TMR0 to increment by 1 is N, then the 8-bit value in the prescaler can be calculated to be = (256 - N). By concatenating the calculated value and the original value from TMR0, the 16-bit value for the frequency is determined.

To measure a wide range of frequencies, the following intermediate steps were taken:

Frequency Range	Precise "gate" delay	Resolution
50 MHz - 10 MHz	1 ms	±10 kHz
10 MHz - 1 MHz	5 ms	±2 kHz
1 MHz - 100 kHz	50 ms	±200 Hz
100 Hz - 10 kHz	200 ms	±50 Hz
50 Hz - 50 Hz	50 ms (†)	±2 Hz

Note: In this case, TMR0 uses the internal 4 MHz clock and counts the number of instances of the external clock. The maximum time required is 50 ms to make a ± 2 Hz accurate measurement for 10 kHz input frequency.

The check for the correct frequency is performed automatically starting with the high frequency and ending with the low frequency. The maximum time required for each conversion is approximately 310 ms. In other words, three frequency checks are done every second.

CONCLUSION

The PIC16C5X family can be used to make a 16-bit measurement of input frequency with a small overhead of one resistor and one I/O port.

Please check the Microchip BBS for the latest version of the source code. Microchip's Worldwide Web Address: www.microchip.com; Bulletin Board Support: MCHIPBBS using CompuServe® (CompuServe membership not required).

APPENDIX A: FREQ.ASM

```
MPASM 01.40 Released             FREQ.ASM   1-16-1997  17:29:41         PAGE  1


LOC  OBJECT CODE     LINE SOURCE TEXT
  VALUE

             00001         list p=16C54
             00002 ;
             00003         include “p16c5x.inc”
             00001         LIST
             00002 ;P16C5X.INC Standard Header File, Version 3.30 Microchip Technology, Inc.
             00224         LIST
             00004
             00005 #define         _ra0            PORTA,0
             00006 #define         _ra1            PORTA,1
             00007
             00008 ;
             00009 ;This program implements the concepts for the frequency counter
             00010 ;using a PIC16C54. In this program, RA0 is connected directly
             00011 ;to the tmr0 input. Tmr0 input is connected thru a 470 ohm
             00012 ;resistor to the freq source. Please note that the
             00013 ;the input freq. is required to be a 50% duty cycle, square
             00014 ;wave. Though none of the internal calculations are based
             00015 ;on this requirement, waveforms which deviate drastically
             00016 ;for the one specified were not tested using these routines.
             00017 ;The routines written in this program, automatically measure
             00018 ;waveforms from 50MHz to 50hz in a period of approx. 300 mS.
             00019 ;After a period of approx 300 mS, the 16 bit “measured” value of
             00020 ;the freq. is read and saved in the location “flo” and “fhi”.
             00021 ;A “range” flag is set to indicate if the measurement belongs to
             00022 ;the five ranges measured namely:
             00023 ;       RANGE:                  Flag name
             00024 ;       50Mhz to 10Mhz -->  Mhz 50 to 10
             00025 ;       10Mhz to 1Mhz  -->  Mhz 10 to 1
             00026 ;       1Mhz to 100Khz -->  Khz 1K to 100
             00027 ;       100Khz to 10Khz --> Khz 100 to 10
             00028 ;       10Khz to 50hz  -->  Hz 10K to 50
             00029 ;The freq. check is repeated to give approx 3 samples/sec.
             00030 ;The “measured” value now has to go through a calculation to
             00031 ;get the actual value. Please use the math routines mentioned
             00032 ;elsewhere in the Embedded Control Handbook to determine
             00033 ;the actual value of the freq.
             00034 ;*****************************************************************
             00035 ;Calculations required to determine actual freq. values
             00036 ;*****************************************************************
             00037 ;First determine which range flag is set, then calculate as follows:
             00038 ;
             00039 ;       Mhz50to10:  freq. = (fhi|flo) X 1000
             00040 ;       Mhz10to1:   freq. = (fhi|flo) X 200
             00041 ;       Khz1Kto100: freq. = (fhi|flo) X 20
             00042 ;       Khz100to10: freq. = (fhi|flo) X 5
             00043 ;       Hz10Kto50: Please see comments above routine Freq10Kto50
             00044 ;
             00045 ;
             00046 ;       Program:          FREQ.ASM
             00047 ;       Revision Date:
             00048 ;                         1-16-97      Compatibility with MPASMWIN 1.40
             00049 ;
             00050 ;*****************************************************************
             00051 ;
```

```
0000000B   00052 fhi     equ            .11            ;high 8 bit value for freq.
0000000A   00053 flo     equ            .10            ;low 8 bit value for freq.
0000000C   00054 tempa   equ            .12
0000000D   00055 tempb   equ            .13
0000000D   00056 limithi equ            .13
0000000C   00057 limitlo equ            .12
0000000D   00058 count   equ            .13
0000000E   00059 trisabuf equ           .14
00000010   00060 InputCounthi           equ     .16
0000000F   00061 InputCountlo           equ     .15
           00062 #define ddra0         trisabuf,0
00000011   00063 RangeFlag              equ     .17
           00064 #define Mhz50to10     RangeFlag,0
           00065 #define Mhz10to1      RangeFlag,1
           00066 #define Khz1Kto100    RangeFlag,2
           00067 #define Khz100to10    RangeFlag,3
           00068 #define Hz10Kto50     RangeFlag,4
           00069 #define RangeError    RangeFlag,5
           00070 ;
00002710   00071 tenMhz  equ            .10000000/.1000
00001388   00072 oneMhz  equ            .1000000/.200
00001388   00073 hndredK equ            .100000/.20
000007D0   00074 tenKhz  equ            .10000/.5
           00075 ;
00000001   00076 Debug   equ            1
           00077 ;
           00078 enabletmr0             macro
           00079        clrf            TMR0
           00080        bsf             ddra0
           00081        movf            trisabuf,W
           00082        tris            PORTA
           00083        endm
           00084 ;
           00085 disabletmr0            macro
           00086        bcf             ddra0
           00087        bcf             _ra0
           00088        movf            trisabuf,W
           00089        tris            PORTA
           00090        endm
           00091 ;
01FF       00092        org     0x1ff
01FF 0A00  00093        goto            start
0000       00094        org     0
0000       00095 start
0000 0C0F  00096        movlw   0x0f                   ;initialize ddra
0001 002E  00097        movwf           trisabuf       ;       /
           00098        disabletmr0
0002 040E              M        bcf            ddra0
0003 0405              M        bcf            _ra0
0004 020E              M        movf           trisabuf,W
0005 0005              M        tris           PORTA
0006 0C37  00099        movlw           B'00110111'    ;set the option register
0007 0002  00100        option                         ;to measure high freq.
0008 0066  00101        clrf            PORTB
0009 0040  00102        clrw
000A 0006  00103        tris            PORTB
           00104
000B       00105 repeat
           00106        enabletmr0                     ;enable tmr0
000B 0061              M        clrf           TMR0
000C 050E              M        bsf            ddra0
000D 020E              M        movf           trisabuf,W
000E 0005              M        tris           PORTA
000F 09BA  00107                call           delay1mS ;wait for 1mS
           00108        disabletmr0                    ;disable tmr0
0010 040E              M        bcf            ddra0
```

```
0011 0405              M         bcf            _ra0
0012 020E              M         movf           trisabuf,W
0013 0005              M         tris           PORTA
0014 09E1    00109        call            getfreq         ;get freq in fhi and flo
0015 097C    00110        call            check10M        ;check if <= 10 Mhz
0016 0743    00111        btfss           STATUS,Z        ;yes then do lower freq.
0017 0A9F    00112        goto            Freq50Mto10M    ;found 50Mhz to 10Mhz freq.
             00113        enabletmr0                      ;enable tmr0
0018 0061              M         clrf           TMR0
0019 050E              M         bsf            ddra0
001A 020E              M         movf           trisabuf,W
001B 0005              M         tris           PORTA
001C 09C3    00114        call            delay5mS        ;wait for 5mS
             00115        disabletmr0                     ;disable tmr0
001D 040E              M         bcf            ddra0
001E 0405              M         bcf            _ra0
001F 020E              M         movf           trisabuf,W
0020 0005              M         tris           PORTA
0021 09E1    00116        call            getfreq         ;get freq in fhi and flo
0022 0990    00117        call            check1M         ;check if <= 1 Mhz
0023 0743    00118        btfss           STATUS,Z        ;yes then do lower freq.
0024 0AA2    00119        goto            Freq10Mto1M     ;else wait for 300 mS
             00120        enabletmr0                      ;enable tmr0
0025 0061              M         clrf           TMR0
0026 050E              M         bsf            ddra0
0027 020E              M         movf           trisabuf,W
0028 0005              M         tris           PORTA
0029 09CD    00121        call            delay50mS       ;wait for 50mS
             00122        disabletmr0                     ;disable tmr0
002A 040E              M         bcf            ddra0
002B 0405              M         bcf            _ra0
002C 020E              M         movf           trisabuf,W
002D 0005              M         tris           PORTA
002E 09E1    00123        call            getfreq         ;get freq in fhi and flo
002F 0995    00124        call            check100K       ;check if <= 100 Khz
0030 0743    00125        btfss           STATUS,Z        ;yes then do lower freq.
0031 0AA5    00126        goto            Freq1Mto100K    ;else wait for 250 mS
             00127        enabletmr0                      ;enable tmr0
0032 0061              M         clrf           TMR0
0033 050E              M         bsf            ddra0
0034 020E              M         movf           trisabuf,W
0035 0005              M         tris           PORTA
0036 09D7    00128        call            delay200mS      ;wait for 200 mS
             00129        disabletmr0                     ;disable tmr0
0037 040E              M         bcf            ddra0
0038 0405              M         bcf            _ra0
0039 020E              M         movf           trisabuf,W
003A 0005              M         tris           PORTA
003B 09E1    00130        call            getfreq         ;get freq in fhi and flo
003C 099A    00131        call            check10K        ;check if <= 10Khz
003D 0743    00132        btfss           STATUS,Z        ;yes then do lower freq.
003E 0AA8    00133        goto            Freq100Kto10K   ;else wait 50mS
             00134 ;
             00135 ;*********************************************************************
             00136 ;The freq. below 10khz to 50hz is got by using the input freq.
             00137 ;to gate the internal 4Mhz clock. The gate is not  “opened”
             00138 ;until a leading or falling transition is observed at the input.
             00139 ;For approx. 50 mS, the internal 1uS clock is sourced to
             00140 ;the TMR0 with a divide by 256 prescaler.  Every 20uS or so,
             00141 ;the transitions on the input line are checked. If a transition
             00142 ;is observed, then the “InputCount” is incremented. At the end of 50mS,
             00143 ;a last transition is used to close the gate and stop the measurement
             00144 ;of the internal freq.
             00145 ;Say the input freq to be measured is 1500hz. In 50mS, approx  75
             00146 ;cycles will be counted in InputCount. The 16 bit value in flo
             00147 ;and fhi is approx. 50,000. Then the freq measured:
```

```
                ;
                ;                freq. = 75 X 1,000,000/60,000 = 1500 in this case
                ; In general    freq. = InputCount X 1,000,000/(fhi|flo).
                ;
003F            Freq10Kto50
003F 0070               clrf            InputCounthi    ;0 --> InputCount
0040 006F               clrf            InputCountlo    ;       /
0041 0C17               movlw           B'00010111'     ;start TMR0 with internal
0042 0002               option                          ; clk. = 1uS
0043 0C0F               movlw           B'00001111'     ;set RA0 as a input
0044 0005               tris            PORTA           ;       /
0045 0705               btfss           _ra0            ;see if level low
0046 0A49               goto            FirstHigh       ;yes then check leading edge
0047            FirstLow
0047 0605               btfsc           _ra0            ;else look for falling edge
0048 0A47               goto            FirstLow        ;               /
0049            FirstHigh                               ;and look for first high
0049 0705               btfss           _ra0            ;look for first high
004A 0A49               goto            FirstHigh       ;       /
004B 0061               clrf            TMR0            ;start count
004C 0CC3               movlw           high .50000     ;get high byte of 50000
004D 002D               movwf           limithi         ;save in RAM
004E            NextLow
004E 0201               movf            TMR0,W          ;50mS over?
004F 008D               subwf           limithi,W       ;approx. 50
0050 0643               btfsc           STATUS,Z        ;no then skip
0051 0A65               goto            LastHigh        ;look for lasthigh
0052 0605               btfsc           _ra0            ;look for low
0053 0A4E               goto            NextLow         ;   /
0054            NextHigh
0054 0201               movf            TMR0,W          ;50mS over?
0055 008D               subwf           limithi,W       ;approx. 50
0056 0643               btfsc           STATUS,Z        ;no then skip
0057 0A5E               goto            LastLow         ;look for lastlow
0058 0705               btfss           _ra0
0059 0A54               goto            NextHigh
005A 02AF               incf            InputCountlo, F ;inc count
005B 0643               btfsc           STATUS,Z        ;overflow?
005C 02B0               incf            InputCounthi, F ;inc high value
005D 0A4E               goto            NextLow         ;check next
005E            LastLow
005E 0201               movf            TMR0,W          ;tmr0 overflow?
005F 002C               movwf           tempa           ;       /
0060 02AC               incf            tempa, F        ;       /
0061 0643               btfsc           STATUS,Z              ;no then skip
0062 0A6C               goto            CloseGate       ;overflow then abort
0063 0605               btfsc           _ra0            ;look for low
0064 0A5E               goto            LastLow         ;       /
0065            LastHigh
0065 0201               movf            TMR0,W         ;tmr0 overflow?
0066 002C               movwf           tempa           ;       /
0067 02AC               incf            tempa, F        ;       /
0068 0643               btfsc           STATUS,Z        ;no then skip
0069 0A6C               goto            CloseGate       ;overflow then abort
006A 0705               btfss           _ra0            ;look for high
006B 0A65               goto            LastHigh
006C            CloseGate
006C 0C27               movlw           B'00100111'     ;stop internal clk
006D 0002               option                          ;       /
                        disabletmr0                     ;disable tmr0
006E 040E               M       bcf             ddra0
006F 0405               M       bcf             _ra0
0070 020E               M       movf            trisabuf,W
0071 0005               M       tris            PORTA
0072 09E1               call            getfreq         ;get freq
0073 028B               incf            fhi,W           ;out of range?
```

```
0074 0643    00210         btfsc           STATUS,Z        ;       /
0075 0A79    00211         goto            OutofRange      ;yes then set flag
0076 0071    00212         clrf            RangeFlag       ;set Hz10Kto50 flag
0077 0591    00213         bsf             Hz10Kto50       ;       /
0078 0AAB    00214         goto            wait50mS
0079         00215 OutofRange
0079 0071    00216         clrf            RangeFlag       ;set error flag
007A 05B1    00217         bsf             RangeError
007B 0AAB    00218         goto            wait50mS
             00219 ;
             00220 ;Check10M, check if the freq < 10 Mhz if yes then the z bit
             00221 ;is set else it is cleared. This routine uses a generic routine
             00222 ;checklimit, which check the value in fhi and flo to the ones
             00223 ;in limithi and limitlo
007C         00224 check10M
007C 0C27    00225         movlw           high tenMhz     ;get hi value of 10Mhz
007D 002D    00226         movwf           limithi         ;save in limithi
007E 0C10    00227         movlw           low tenMhz      ;get lo value of 10Mhz
007F 002C    00228         movwf           limitlo         ;save in limitlo
             00229 ;checklimit, checks if the freq in flo and fhi is lower
             00230 ;than the values set in limitlo and limithi. It is a
             00231 ;common routine used to check all set limits. If the value
             00232 ;is <= the z bit = 0 else z = 1 .
0080         00233 checklimit
0080 020B    00234         movf            fhi,W           ;get high freq value
0081 00AD    00235         subwf           limithi, F      ;and check with high value
0082 0643    00236         btfsc           STATUS,Z        ;if not equal then skip
0083 0A88    00237         goto            chk10Mlo        ;else check low value
0084 0703    00238         btfss           STATUS,C        ;skip if value is < limit
0085 0800    00239         retlw    0               ;value > limit so z = 0.
0086 0040    00240         clrw                            ;z = 1
0087 0800    00241         retlw    0               ;return with z flag set
0088         00242 chk10Mlo
0088 020A    00243         movf            flo,W           ;get low value
0089 00AC    00244         subwf           limitlo, F      ;and check with low value
008A 0643    00245         btfsc           STATUS,Z        ;not equal then skip
008B 0800    00246         retlw    0               ;else return with z = 1
008C 0703    00247         btfss           STATUS,C        ;skip if value is < limit
008D 0800    00248         retlw    0               ;value > limit so z = 0
008E 0040    00249         clrw                            ; z = 1
008F 0800    00250         retlw    0               ;return with z flag set
             00251 ;
             00252 ;Check1M checks if freq is below 1 Mhz
             00253 ;
0090         00254 check1M
0090 0C13    00255         movlw           high oneMhz     ;get hi value of 1Mhz
0091 002D    00256         movwf           limithi         ;save in limithi
0092 0C88    00257         movlw           low oneMhz      ;get lo value of 1Mhz
0093 002C    00258         movwf           limitlo         ;save in limitlo
0094 0A80    00259         goto            checklimit
             00260 ;
0095         00261 check100K
0095 0C13    00262         movlw           high hndredK    ;get hi value of 100Khz
0096 002D    00263         movwf           limithi         ;save in limithi
0097 0C88    00264         movlw           low hndredK     ;get lo value of 100Khz
0098 002C    00265         movwf           limitlo         ;save in limitlo
0099 0A80    00266         goto            checklimit
             00267 ;
009A         00268 check10K
009A 0C07    00269         movlw           high tenKhz     ;get hi value of 10Khz
009B 002D    00270         movwf           limithi         ;save in limithi
009C 0CD0    00271         movlw           low tenKhz      ;get lo value of 10Khz
009D 002C    00272         movwf           limitlo         ;save in limitlo
009E 0A80    00273         goto            checklimit
             00274 ;
             00275 ;
```

```
009F          00276 Freq50Mto10M
009F 0071     00277         clrf            RangeFlag
00A0 0511     00278         bsf             Mhz50to10
00A1 0AAB     00279         goto            wait300mS
00A2          00280 Freq10Mto1M
00A2 0071     00281         clrf            RangeFlag
00A3 0531     00282         bsf             Mhz10to1
00A4 0AAB     00283         goto            wait300mS
00A5          00284 Freq1Mto100K
00A5 0071     00285         clrf            RangeFlag
00A6 0551     00286         bsf             Khz1Kto100
00A7 0AAB     00287         goto            wait250mS
00A8          00288 Freq100Kto10K
00A8 0071     00289         clrf            RangeFlag
00A9 0571     00290         bsf             Khz100to10
00AA 0AAB     00291         goto            wait50mS
              00292 ;
00AB          00293 wait300mS
              00294     If      !Debug
              00295         call            delay50mS
              00296     ENDIF
00AB          00297 wait250mS
              00298     IF      !Debug
              00299         call            delay50mS
              00300         call            delay50mS
              00301         call            delay50mS
              00302         call            delay50mS
              00303     ENDIF
00AB          00304 wait50mS
              00305     IF      !Debug
              00306         call            delay50mS
              00307     ENDIF
              00308 ;
              00309 ;
              00310     IF      Debug
              00311 ;This routine debugs freq. on a PICDEM1 board.
00AB          00312 checkRA1
00AB 0625     00313         btfsc           _ra1
00AC 0AAB     00314         goto            checkRA1
00AD 09D7     00315         call            delay200mS
00AE 020B     00316         movf            fhi,W
00AF 0026     00317         movwf           PORTB
00B0          00318 chkRA1hi
00B0 0725     00319         btfss           _ra1
00B1 0AB0     00320         goto            chkRA1hi
00B2          00321 chkRA1lo
00B2 0625     00322         btfsc           _ra1
00B3 0AB2     00323         goto            chkRA1lo
00B4 09D7     00324         call            delay200mS
00B5 020A     00325         movf            flo,W
00B6 0026     00326         movwf           PORTB
00B7 0725     00327         btfss           _ra1
00B8 0AB7     00328         goto            $-1
              00329     ENDIF
00B9 0A0B     00330         goto            repeat
              00331 ;
              00332 ;delay1ms, is a very accurate 1mS delay for a 4Mhz clock.
00BA          00333 delay1mS
00BA 0CC5     00334         movlw           .197
00BB 002D     00335         movwf           count
00BC 0000     00336         nop
00BD 0ABE     00337         goto            $+1
00BE 0ABF     00338         goto            $+1
00BF          00339 dly1mS
00BF 0AC0     00340         goto            $+1
00C0 02ED     00341         decfsz          count, F
```

```
00C1 0ABF    00342         goto            dly1mS
00C2 0800    00343         retlw    0
             00344 ;
             00345 ;delay5mS uses delay1mS to get a very accurate 5 mS delay
00C3         00346 delay5mS
00C3 09BA    00347         call            delay1mS
00C4 09BA    00348         call            delay1mS
00C5 09BA    00349         call            delay1mS
00C6 09BA    00350         call            delay1mS
00C7 09BA    00351         call            delay1mS
00C8 0C04    00352         movlw           .4
00C9 002D    00353         movwf           count
00CA         00354 tweek5mS
00CA 02ED    00355         decfsz          count, F
00CB 0ACA    00356         goto            tweek5mS
00CC 0800    00357         return
             00358 ;
             00359 ;delay50mS uses delay1mS to get a very accurate 50mS delay
00CD         00360 delay50mS
00CD 0C32    00361         movlw           .50
00CE 002C    00362         movwf           tempa
00CF         00363 dly50mS
00CF 09BA    00364         call            delay1mS
00D0 02EC    00365         decfsz          tempa, F
00D1 0ACF    00366         goto            dly50mS
00D2 0C0E    00367         movlw           .14
00D3 002D    00368         movwf           count
00D4         00369 tweek50mS
00D4 02ED    00370         decfsz          count, F
00D5 0AD4    00371         goto            tweek50mS
00D6 0800    00372         retlw    0
             00373 ;
             00374 ;delay200mS uses delay1mS to get a very accurate 200mS delay.
00D7         00375 delay200mS
00D7 0CC8    00376         movlw           .200
00D8 002C    00377         movwf           tempa
00D9         00378 dly200mS
00D9 09BA    00379         call            delay1mS
00DA 02EC    00380         decfsz          tempa, F
00DB 0AD9    00381         goto            dly200mS
00DC 0C40    00382         movlw           .64
00DD 002D    00383         movwf           count
00DE         00384 tweek200mS
00DE 02ED    00385         decfsz          count, F
00DF 0ADE    00386         goto            tweek200mS
00E0 0800    00387         retlw    0
             00388 ;
             00389 ;getfreq, toggles the RA0 pin  to shift out the value in the
             00390 ;prescaler. The number of toggles is kept in count. If the value
             00391 ;in tmr0 increments, then the low 8 bit value = !count + 1. The low
             00392 ;value of the freq. is loaded in flo and the high in fhi.
00E1         00393 getfreq
00E1 0201    00394         movf            TMR0,W                  ;get the tmr0 value
00E2 002B    00395         movwf           fhi                     ;save in fhi
00E3 006D    00396         clrf            count                   ;keep track of the toggles
00E4         00397 toggle
00E4 02AD    00398         incf            count, F                ;inc for first
00E5 0405    00399         bcf             _ra0                    ;toggle the input
00E6 0505    00400         bsf             _ra0                    ;       /
00E7 0201    00401         movf            TMR0,W                  ;see if tmr0 incremented
00E8 008B    00402         subwf           fhi,W                   ;       /
00E9 0643    00403         btfsc           STATUS,Z                ;yes then skip
00EA 0AE4    00404         goto            toggle                  ;no then toggle again
00EB 026D    00405         comf            count, F                ;else complement count
00EC 028D    00406         incf            count,W                 ;and increment
00ED 002A    00407         movwf                   flo             ;save in flo
```

```
00EE 0800    00408         retlw           0                       ;return
             00409 ;
             00410         end

MEMORY USAGE MAP (‘X’ = Used,  ‘-’ = Unused)


0000 : XXXXXXXXXXXXXXXX XXXXXXXXXXXXXXXX XXXXXXXXXXXXXXXX XXXXXXXXXXXXXXXX
0040 : XXXXXXXXXXXXXXXX XXXXXXXXXXXXXXXX XXXXXXXXXXXXXXXX XXXXXXXXXXXXXXXX
0080 : XXXXXXXXXXXXXXXX XXXXXXXXXXXXXXXX XXXXXXXXXXXXXXXX XXXXXXXXXXXXXXXX
00C0 : XXXXXXXXXXXXXXXX XXXXXXXXXXXXXXXX XXXXXXXXXXXXXXXX- ----------------
01C0 : ---------------- ---------------- ---------------- ---------------X

All other memory blocks unused.

Program Memory Words Used:   240
Program Memory Words Free:   272


Errors   :     0
Warnings :     0 reported,     0 suppressed
Messages :     0 reported,     0 suppressed
```

Note the following details of the code protection feature on PICmicro® MCUs.

- The PICmicro family meets the specifications contained in the Microchip Data Sheet.
- Microchip believes that its family of PICmicro microcontrollers is one of the most secure products of its kind on the market today, when used in the intended manner and under normal conditions.
- There are dishonest and possibly illegal methods used to breach the code protection feature. All of these methods, to our knowledge, require using the PICmicro microcontroller in a manner outside the operating specifications contained in the data sheet. The person doing so may be engaged in theft of intellectual property.
- Microchip is willing to work with the customer who is concerned about the integrity of their code.
- Neither Microchip nor any other semiconductor manufacturer can guarantee the security of their code. Code protection does not mean that we are guaranteeing the product as “unbreakable”.
- Code protection is constantly evolving. We at Microchip are committed to continuously improving the code protection features of our product.

If you have any further questions about this matter, please contact the local sales office nearest to you.

Trademarks

Printed on recycled paper.

DNV Certification, Inc. USA
ANSI • RAB QMS ACCREDITED
DNV MSC The Netherlands Accredited by the RvA
DNV
ISO 9001 / QS-9000 REGISTERED FIRM

Microchip received QS-9000 quality system certification for its worldwide headquarters, design and wafer fabrication facilities in Chandler and Tempe, Arizona in July 1999. The Company’s quality system processes and procedures are QS-9000 compliant for its PICmicro® 8-bit MCUs, KEELOQ® code hopping devices, Serial EEPROMs and microperipheral products. In addition, Microchip’s quality system for the design and manufacture of development systems is ISO 9001 certified.

WORLDWIDE SALES AND SERVICE

AMERICAS

Corporate Office
2355 West Chandler Blvd.
Chandler, AZ 85224-6199
Tel: 480-792-7200 Fax: 480-792-7277
Technical Support: 480-792-7627
Web Address: http://www.microchip.com

Rocky Mountain
2355 West Chandler Blvd.
Chandler, AZ 85224-6199
Tel: 480-792-7966 Fax: 480-792-7456

Atlanta
500 Sugar Mill Road, Suite 200B
Atlanta, GA 30350
Tel: 770-640-0034 Fax: 770-640-0307

Boston
2 Lan Drive, Suite 120
Westford, MA 01886
Tel: 978-692-3848 Fax: 978-692-3821

Chicago
333 Pierce Road, Suite 180
Itasca, IL 60143
Tel: 630-285-0071 Fax: 630-285-0075

Dallas
4570 Westgrove Drive, Suite 160
Addison, TX 75001
Tel: 972-818-7423 Fax: 972-818-2924

Detroit
Tri-Atria Office Building
32255 Northwestern Highway, Suite 190
Farmington Hills, MI 48334
Tel: 248-538-2250 Fax: 248-538-2260

Kokomo
2767 S. Albright Road
Kokomo, Indiana 46902
Tel: 765-864-8360 Fax: 765-864-8387

Los Angeles
18201 Von Karman, Suite 1090
Irvine, CA 92612
Tel: 949-263-1888 Fax: 949-263-1338

New York
150 Motor Parkway, Suite 202
Hauppauge, NY 11788
Tel: 631-273-5305 Fax: 631-273-5335

San Jose
Microchip Technology Inc.
2107 North First Street, Suite 590
San Jose, CA 95131
Tel: 408-436-7950 Fax: 408-436-7955

Toronto
6285 Northam Drive, Suite 108
Mississauga, Ontario L4V 1X5, Canada
Tel: 905-673-0699 Fax: 905-673-6509

ASIA/PACIFIC

Australia
Microchip Technology Australia Pty Ltd
Suite 22, 41 Rawson Street
Epping 2121, NSW
Australia
Tel: 61-2-9868-6733 Fax: 61-2-9868-6755

China - Beijing
Microchip Technology Consulting (Shanghai) Co., Ltd., Beijing Liaison Office
Unit 915
Bei Hai Wan Tai Bldg.
No. 6 Chaoyangmen Beidajie
Beijing, 100027, No. China
Tel: 86-10-85282100 Fax: 86-10-85282104

China - Chengdu
Microchip Technology Consulting (Shanghai) Co., Ltd., Chengdu Liaison Office
Rm. 2401, 24th Floor,
Ming Xing Financial Tower
No. 88 TIDU Street
Chengdu 610016, China
Tel: 86-28-6766200 Fax: 86-28-6766599

China - Fuzhou
Microchip Technology Consulting (Shanghai) Co., Ltd., Fuzhou Liaison Office
Unit 28F, World Trade Plaza
No. 71 Wusi Road
Fuzhou 350001, China
Tel: 86-591-7503506 Fax: 86-591-7503521

China - Shanghai
Microchip Technology Consulting (Shanghai) Co., Ltd.
Room 701, Bldg. B
Far East International Plaza
No. 317 Xian Xia Road
Shanghai, 200051
Tel: 86-21-6275-5700 Fax: 86-21-6275-5060

China - Shenzhen
Microchip Technology Consulting (Shanghai) Co., Ltd., Shenzhen Liaison Office
Rm. 1315, 13/F, Shenzhen Kerry Centre,
Renminnan Lu
Shenzhen 518001, China
Tel: 86-755-2350361 Fax: 86-755-2366086

Hong Kong
Microchip Technology Hongkong Ltd.
Unit 901-6, Tower 2, Metroplaza
223 Hing Fong Road
Kwai Fong, N.T., Hong Kong
Tel: 852-2401-1200 Fax: 852-2401-3431

India
Microchip Technology Inc.
India Liaison Office
Divyasree Chambers
1 Floor, Wing A (A3/A4)
No. 11, O'Shaugnessey Road
Bangalore, 560 025, India
Tel: 91-80-2290061 Fax: 91-80-2290062

Japan
Microchip Technology Japan K.K.
Benex S-1 6F
3-18-20, Shinyokohama
Kohoku-Ku, Yokohama-shi
Kanagawa, 222-0033, Japan
Tel: 81-45-471- 6166 Fax: 81-45-471-6122

Korea
Microchip Technology Korea
168-1, Youngbo Bldg. 3 Floor
Samsung-Dong, Kangnam-Ku
Seoul, Korea 135-882
Tel: 82-2-554-7200 Fax: 82-2-558-5934

Singapore
Microchip Technology Singapore Pte Ltd.
200 Middle Road
#07-02 Prime Centre
Singapore, 188980
Tel: 65-334-8870 Fax: 65-334-8850

Taiwan
Microchip Technology Taiwan
11F-3, No. 207
Tung Hua North Road
Taipei, 105, Taiwan
Tel: 886-2-2717-7175 Fax: 886-2-2545-0139

EUROPE

Denmark
Microchip Technology Nordic ApS
Regus Business Centre
Lautrup hoj 1-3
Ballerup DK-2750 Denmark
Tel: 45 4420 9895 Fax: 45 4420 9910

France
Microchip Technology SARL
Parc d'Activite du Moulin de Massy
43 Rue du Saule Trapu
Batiment A - ler Etage
91300 Massy, France
Tel: 33-1-69-53-63-20 Fax: 33-1-69-30-90-79

Germany
Microchip Technology GmbH
Gustav-Heinemann Ring 125
D-81739 Munich, Germany
Tel: 49-89-627-144 0 Fax: 49-89-627-144-44

Italy
Microchip Technology SRL
Centro Direzionale Colleoni
Palazzo Taurus 1 V. Le Colleoni 1
20041 Agrate Brianza
Milan, Italy
Tel: 39-039-65791-1 Fax: 39-039-6899883

United Kingdom
Arizona Microchip Technology Ltd.
505 Eskdale Road
Winnersh Triangle
Wokingham
Berkshire, England RG41 5TU
Tel: 44 118 921 5869 Fax: 44-118 921-5820

01/18/02