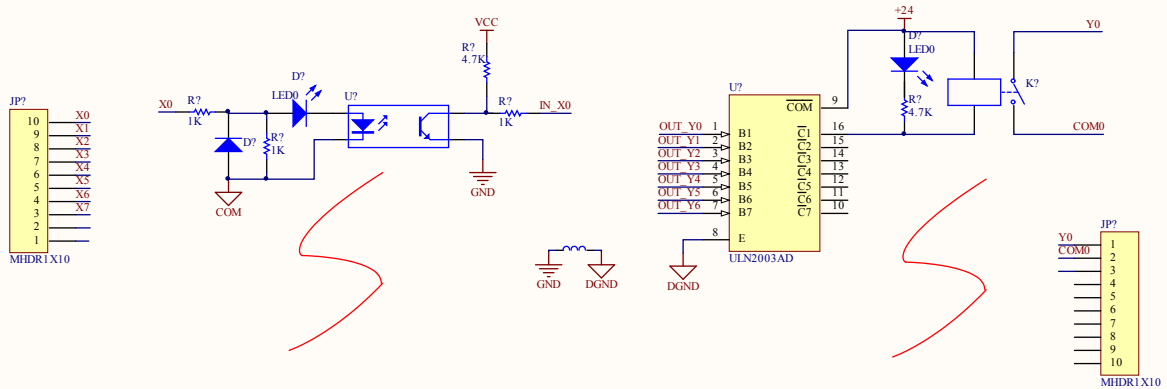

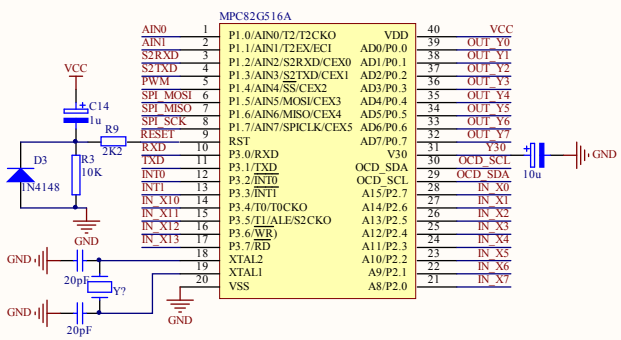

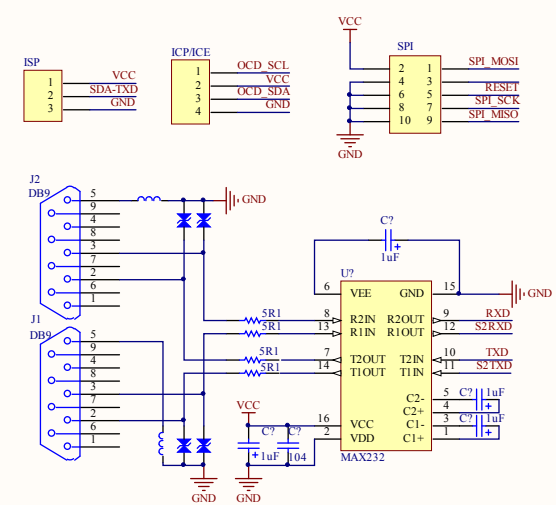

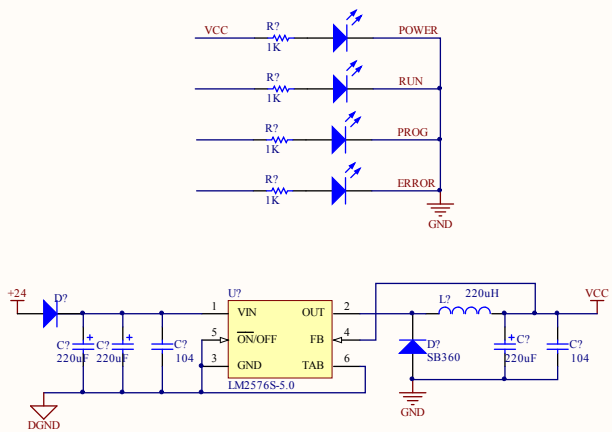

Title		
Size A3	Number	Revision
Date: 2009-5-3	Sheet of	
File: C:\Documents and Settings\...\DIY PLC Schematic	Drawn By:	