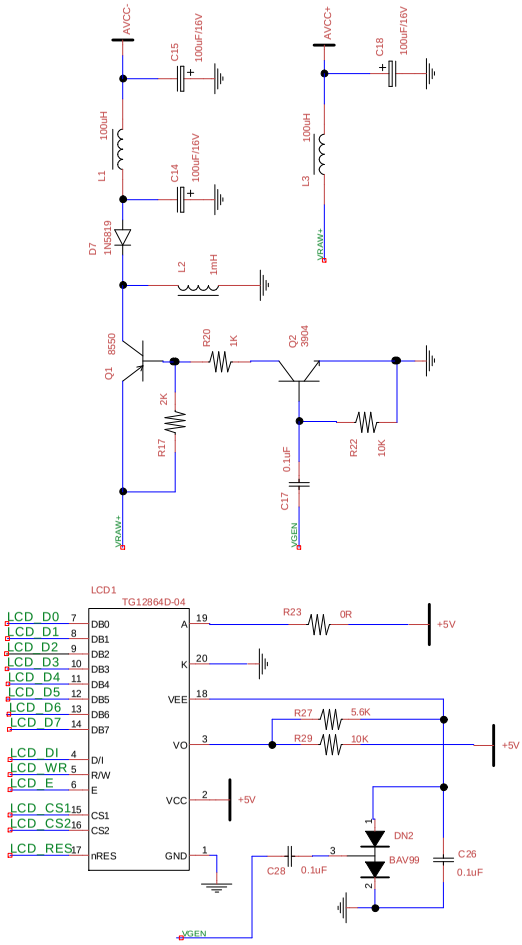
AVCC-
C15
100uF/16V
AVCC+
C18
100uF/16V
L1
100uH
C14
100uF/16V
L3
100uH
VRAW+
D7
1N5819
L2
1mH
Q1
8550
R20
1K
Q2
3904
R17
2K
R22
10K
C17
0.1uF
VGEN
VRAW+
LCD1
TG12864D-04
LCD_D0 7 DB0
LCD_D1 8 DB1
LCD_D2 9 DB2
LCD_D3 10 DB3
LCD_D4 11 DB4
LCD_D5 12 DB5
LCD_D6 13 DB6
LCD_D7 14 DB7
LCD_DI 4 D/I
LCD_WR 5 R/W
LCD_E 6 E
LCD_CS1 15 CS1
LCD_CS2 16 CS2
LCD_RES 17 nRES
A 19
K 20
VEE 18
VO 3
VCC 2
GND 1
R23
0R
+5V
R27
5.6K
R29
10K
+5V
+5V
DN2
BAV99
C28
0.1uF
C26
0.1uF
VGEN

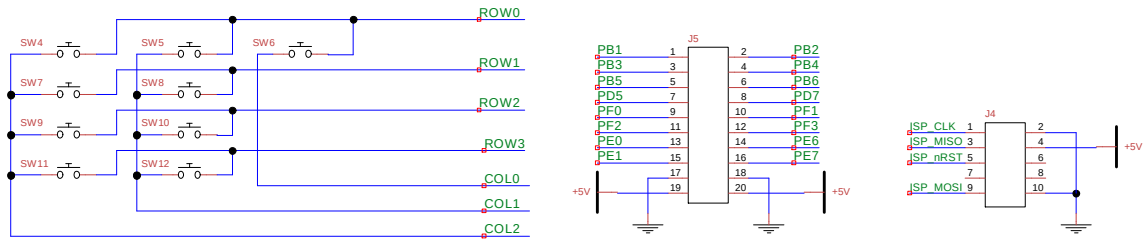
SW4
SW5
SW6
SW7
SW8
SW9
SW10
SW11
SW12
ROW0
ROW1
ROW2
ROW3
COL0
COL1
COL2
J5
PB1
PB3
PB5
PD5
PF0
PF2
PE0
PE1
PB2
PB4
PB6
PD7
PF1
PF3
PE6
PE7
+5V
+5V
J4
ISP_CLK
ISP_MISO
ISP_nRST
ISP_MOSI
+5V

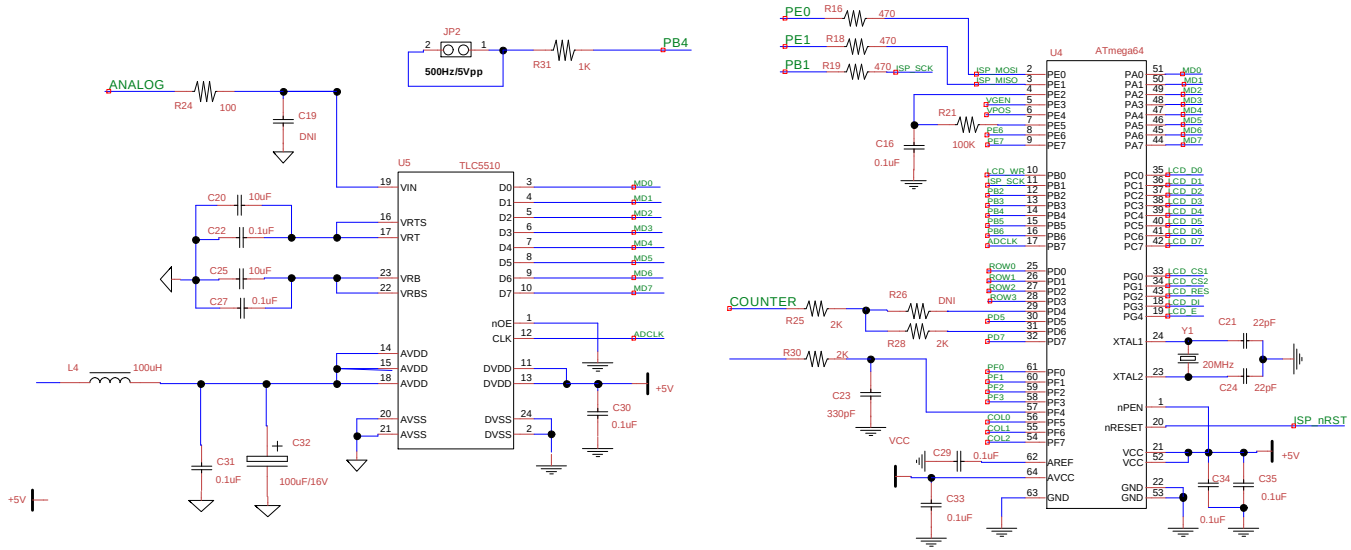
JP2
500Hz/5Vpp
PB4
R31
1K
ANALOG
R24
100
C19
DNI
U5
TLC5510
VIN
VRTS
VRT
VRB
VRBS
AVDD
AVSS
D0
D1
D2
D3
D4
D5
D6
D7
nOE
CLK
DVDD
DVSS
MD0
MD1
MD2
MD3
MD4
MD5
MD6
MD7
ADCLK
C20
10uF
C22
0.1uF
C25
10uF
C27
0.1uF
L4
100uH
C31
0.1uF
C32
100uF/16V
C30
0.1uF
+5V
PE0
PE1
PB1
R16
R18
R19
470
ISP_SCK
ISP_MOSI
ISP_MISO
VGEN
VPOS
R21
100K
C16
0.1uF
U4
ATmega64
PE0
PE1
PE2
PE3
PE4
PE5
PE6
PE7
PB0
PB1
PB2
PB3
PB4
PB5
PB6
PB7
PD0
PD1
PD2
PD3
PD4
PD5
PD6
PD7
PF0
PF1
PF2
PF3
PF4
PF5
PF6
PF7
AREF
AVCC
GND
PA0
PA1
PA2
PA3
PA4
PA5
PA6
PA7
PC0
PC1
PC2
PC3
PC4
PC5
PC6
PC7
PG0
PG1
PG2
PG3
PG4
XTAL1
XTAL2
nPEN
nRESET
VCC
CD_WR
CD_D0
CD_D1
CD_D2
CD_D3
CD_D4
CD_D5
CD_D6
CD_D7
CD_CS1
CD_CS2
CD_RES
CD_DI
CD_E
ROW0
ROW1
ROW2
ROW3
COL0
COL1
COL2
COUNTER
R25
2K
R26
DNI
R28
2K
R30
2K
C23
330pF
C29
0.1uF
C33
0.1uF
C21
22pF
Y1
20MHz
C24
22pF
ISP_nRST
C34
0.1uF
C35
0.1uF

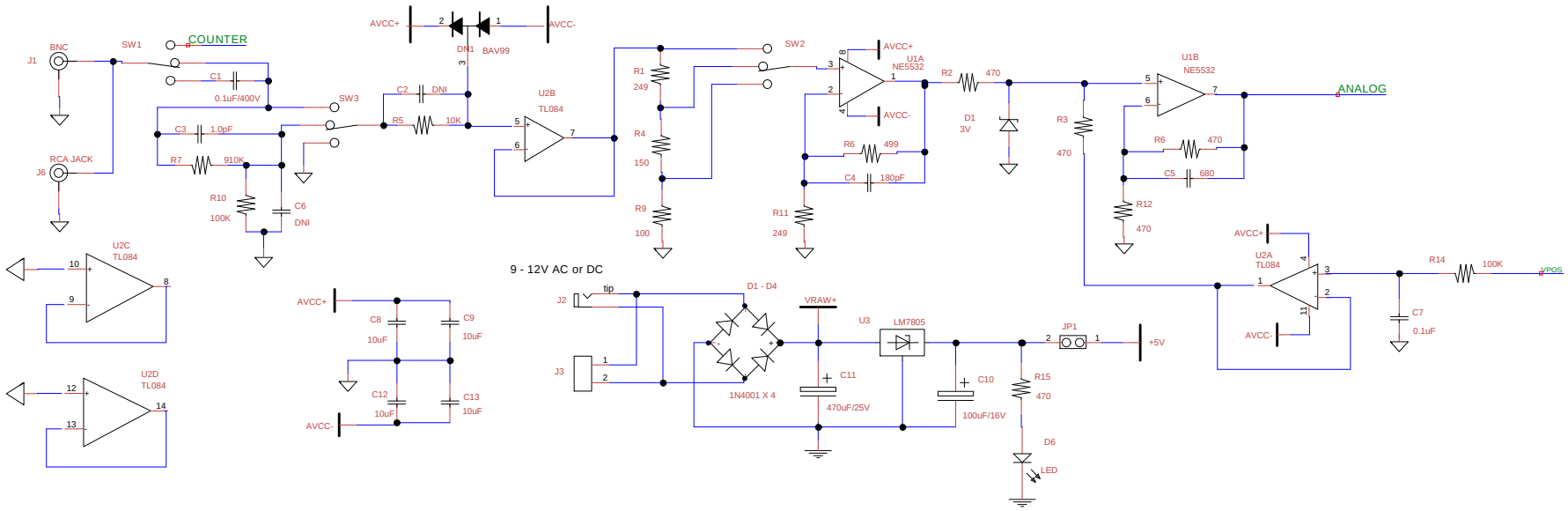

Title	SINGLE BOARD LCD OSCILLOSCOPE
Author	WWW.JYETECH.COM
File	\InProgress\Projects\LcdScope\105-06200-00A.dsn
Document	105-06200-00A
Revision	00A
Date	JULY 17, 2008
Sheets	1 of 1