Control No.：	TR-S-018
Version No.：	1

SPECIFICATIONS

PRODUCT ：LCD MODULE

MODEL NO.：G160240-13

CUSTOMER			SHING YIH TECH.		
APPROVED	CHECKED	CHECKED	APPROVED	CHECKED	PREPARED
			Kevin Mao		Y. U. Tsai

□APPROVAL FOR SPECIFICATIONS ONLY
□APPROVAL FOR SPECIFICATIONS AND SAMPLE

興益科技股份有限公司
SHING YIH TECHNOLOGY CO., LTD.

RECORDS OF REVISION

STANDARD DOC.	PRODUCT SPEC.	MODEL NO.	G160240 - 13		
DATE	**REVISED NO.**	**REVISED DESCRIPTIONS**	**PREPARED**	**CHECKED**	**APPROVED**
2001.11. 02	1	INITIAL ISSUED	Y. U. Tsai		Kevin Mao

CONTENTS

1. GERENAL SPECIFICATIONS - 2
2. FEATURES - 2
3. MECHANICAL SPECIFICATIONS - 2
4. ABSOLUTE MAXIMUM RATINGS - 3
5. ELECTRICAL CHARACTERISTICS - 3
6. EL(ELECTRO-LUMINESCENCE) BACKLIGHT CHARACTERISTICS - - - - - 4
7. OPTICAL CHARACTERISTICS - 5
8. TIMING CHARACTERISTICS - 6
9. PIN ASSIGNMENT - 9
10. PIN NO - 10
11. BLOCK DIAGRAM - 11
12. OUTLINE DIMENSION - 11
13. EXAMPLE OF LCD POWER SUPPLY - 12
14. ENVIRONMENTAL ABSOLUTE MAXIMUM RATINGS - - - - - - - - - - - - 13
15. CODE SYSTEM OF PRODUCTION LOT - 14
16. PRECAUTION FOR USE - 14

1. GENERAL SPECIFICATIONS：

1-1 SCOPE:

This specification covers the delivery requirements for the liquid crystal display delivered by SHING-YIH Technology to Customer.

1-2 PRODUCTS:

Liquid Crystal Display Module (LCM)

1-3 MODULE NAME:

G160240-13

2. FEATURES：

2-1 Display type: FSTN, Black & White , Transflective, 6O'clock, Positive

2-2 Driving Method: 1/240Duty，1/13 Bias

2-3 LCD Driver IC: NT7703(Common Device) or equivalent
NT7704(Segment Device) or equivalent

2-4 Excludes Bulit-in LCD Controller IC and Bias voltage supply circuit

3. MECHANICAL SPECIFICATIONS：

ITEM	SPECIFICATIONS	UNIT
OUTLINE DIMEMSIONS	75.4(W) x 69.6(H) x 3.8MAX(T)	mm
VIEWING AREA	41.4(W) x 60.6(H)	mm
ACTIVE AREA	38.38 (W) x 57.58(H)	mm
DISP. CONSTRUCTION	160 x 240 dots	—
NUMBER OF DOTS	160 x 240	Dots
DOT SIZE	0.22(W) x 0.22(H)	mm
DOT PITCH	0.24(W) x 0.24(H)	mm
ASSY. TYPE	COG	—
BACKLIGHT	Electro-Luminescence (White color)	—
WEIGHT	About 24	g

4. ABSOLUTE MAXIMUM RATING

ITEM	SYMBOL	CONDITION	STANDARD VALUE			UNIT
			MIN	TYP	MAX	
POWER SUPPLY FOR LOGIC	V_{DD}-V_{SS}	Ta=25℃	-0.3	—	+7.0	V
POWER SUPPLY FOR LCD DRIVING	V_{DD}-V_5	Ta=25℃	-0.3	—	+30.0	V
INPUT VOLTAGE	V_{IN}	Ta=25℃	-0.3	—	$V_{DD+0.3}$	V
OPERATION TEMPERATURE	T_{OPR}	—	0	—	+50	℃
STORAGE TEMPERATURE	T_{STG}	—	- 20	—	+60	℃

NOTE : LCM SHOULD BE GROUNDED DURING HANDLING LCM

5. ELECTRICAL CHARACTERISTICS

(Ta=25℃)

ITEM	SYMBOL	CONDITION	STANDARD VALUE			UNIT
			MIN	TYP	MAX	
POWER SUPPLY VOLTAGE	V_{DD}-V_{SS}	—	2.5	3.3	5.5	V
POWER SUPPLY FOR LCD DRIVING	V_{DD}-V_{EE}	Ta=50℃	—	20.0	—	V
		Ta=25℃	—	21.5	—	V
		Ta= 0℃	—	23.5	—	V
INPUT VOLTAGE “H” LEVEL	V_{IH}	—	0.8VDD	—	—	V
INPUT VOLTAGE “L” LEVEL	V_{IL}	—	—	—	0.2VDD	V
OUTPUT VOLTAGE “H” LEVEL	V_{OH}	—	VDD-0.4	—	—	V
OUTPUT VOLTAGE “L” LEVEL	V_{OL}	—	—	—	0.4	V
FRAME FREQUENCY	Freq.	---	—	70	—	Hz
POWER SUPPLY CURRENT	I_{DD}	—	—	0.07	—	mA
	I_{EE}	—	—	1.0	—	mA

6. EL BACKLIGHT CHARACTERISTICS

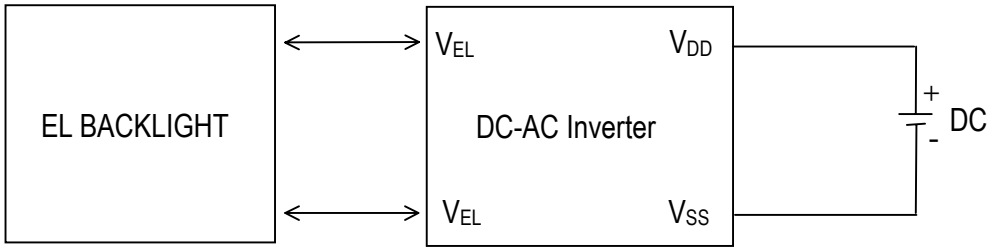

6-1 ABSOLUTE MAXIMUM RATINGS

PARAMETER	SYMBOL	WHITE COLOR			UNIT
		MIN	TYP	MAX	
VOLTAGE	VEL	—	50	—	Vms
SPECTRUM	FEL	—	370	—	Hz
OPERATION TEMPERATURE SCOPE	TOPR	-20	—	+70	˚C
STORAGE TEMPERATURE SCOPE	TSTG	-30	—	+80	˚C

6-2 ELECTRICAL CHARACTERISTICS

PARAMETER	STANDARD VALUE			UNIT
	MIN	TYP	MAX	
EL OPERATING VOLTAGE	—	50	80	Vrms
SUPPLY SPECTRUM	—	370	1000	Hz
BRIGHTNESS	1.5	—	—	cd/m^2
WHITE	—	X = 0.30	—	—
	—	Y = 0.43	—	—
CURRENT CONSUMPTION	0.09	0.17	0.24	mA/cm^2
POWER CONSUMPTION	1.8	—	—	mW/cm^2

7.OPTICAL CHARACTERISTICS

(Ta=25℃)

ITEM	SYMBOL	CONDITION	MIN	TYP	MAX	UNIT	NOTE
VIEWING ANGLE	$\theta 1$	Cr ≥ 2.0	15	—	—	degree	(1)
	$\theta 2, \theta 3, \theta 4$	Vop=21.5V	30	—	—		
CONTRAST RATIO	Cr	VOP=21.5V	—	8	—	—	(2)
RESPONSE TIME (rise)	Tr	$\theta 1$= 0° $\theta 2$= 0°	—	150	—	ms	(3)
RESPONSE TIME (fall)	Tf	$\theta 1$= 0° $\theta 2$= 0°	—	400	—	ms	(3)

(1)DEFINITION OF VIEWING ANGLE

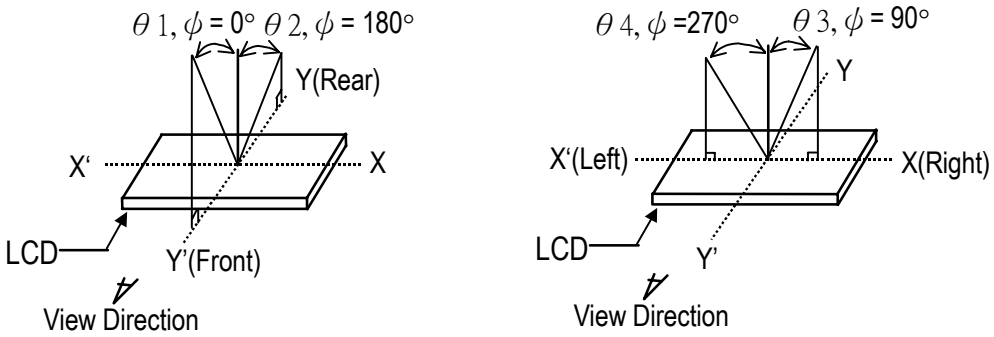

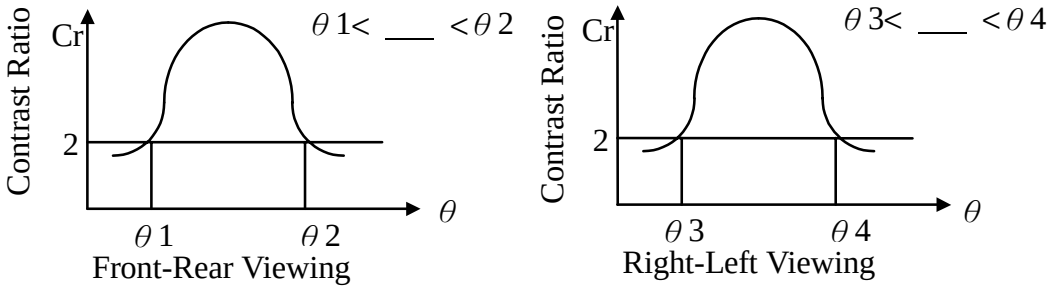

(2) DEFINITION OF CONTRAST

$$C.R = \frac{\text{Brightness of non-selected segment (B2)}}{\text{Brightness of selected segment (B1)}}$$

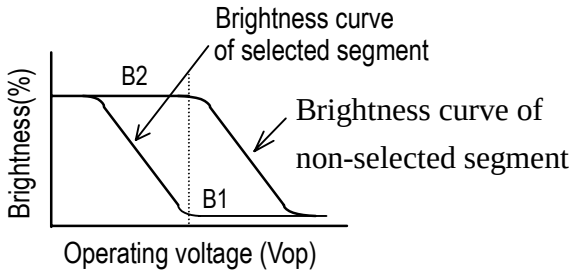

(3) DEFINITION OF RESPONSE

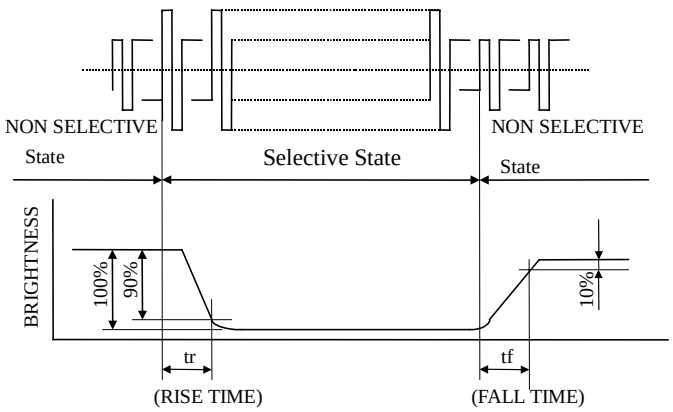

(4)Measuring Instruments For Electro-optical Characteristics

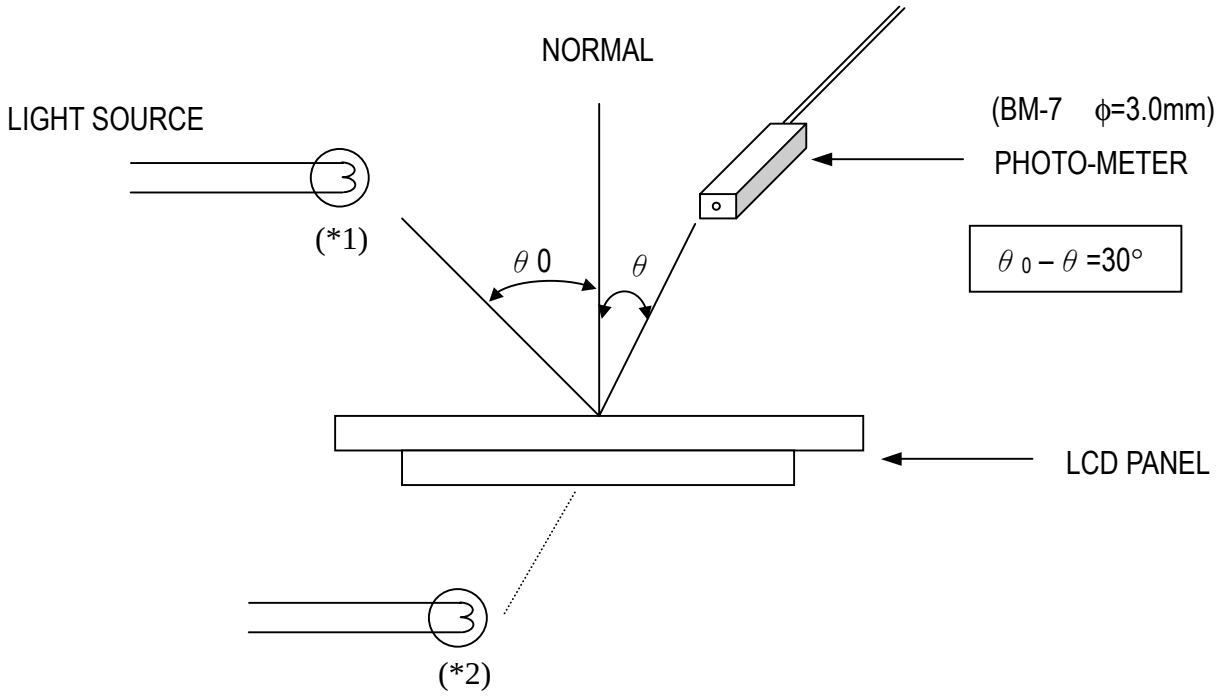

*1.Light source position for measuring the reflective type of LCD panel

*2.Light source position for measuring the transflective / transmissive types of LCD panel

8. TIMING CHARACTERISTICS

8-1 AC CHARACTERISTICS

(V_{SS}=V_5=0V,V_{DD}=3.0V to4.5V , Ta=-20 to +85℃)

Item	Symbol	Condition	Min	Typ	Max	Unit
Shift clock period	t_{WCK}	tr, tf≦10ns	66	—	—	ns
Shift clock “H” pulse width	t_{WCKH}	—	23	—	—	ns
Shift clock “L” pulse time	t_{WCKL}	—	23	—	—	ns
Data setup time	t_{DS}	—	15	—	—	ns
Data hold time	t_{DH}	—	23	—	—	ns
Latch pulse “H” pulse width	t_{WLPH}	—	30	—	—	ns
Shift clock rise to Latch pulse rise time	t_{LD}	—	0	—	—	ns
Shift clock fall to Latch pulse fall time	t_{SL}	—	50	—	—	ns
Latch pulse rise to Shift pulse rise time	t_{LS}	—	30	—	—	ns
Latch pulse fall to Shift pulse fall time	t_{LH}	—	30	—	—	ns
Input signal rise time	tr	—	—	—	50	ns
Input signal fall time	t_f	—	—	—	50	ns
Enable setup time	t_S	—	15	—	—	ns
DISPOFF Removal time	t_{SD}	—	100	—	—	ns
DISPOFF enable pulse width	t_{WDL}	—	1.2	—	—	μs
Output delay time(1)	t_D	CL=15pF	—	—	41	ns
Output delay time(2)	t_{pd1}, t_{pd2}	CL=15pF	—	—	1.2	μs
Output delay time(3)	t_{pd3}	CL=15pF	—	—	1.2	μs

8-2 TIMING WAVEFORM

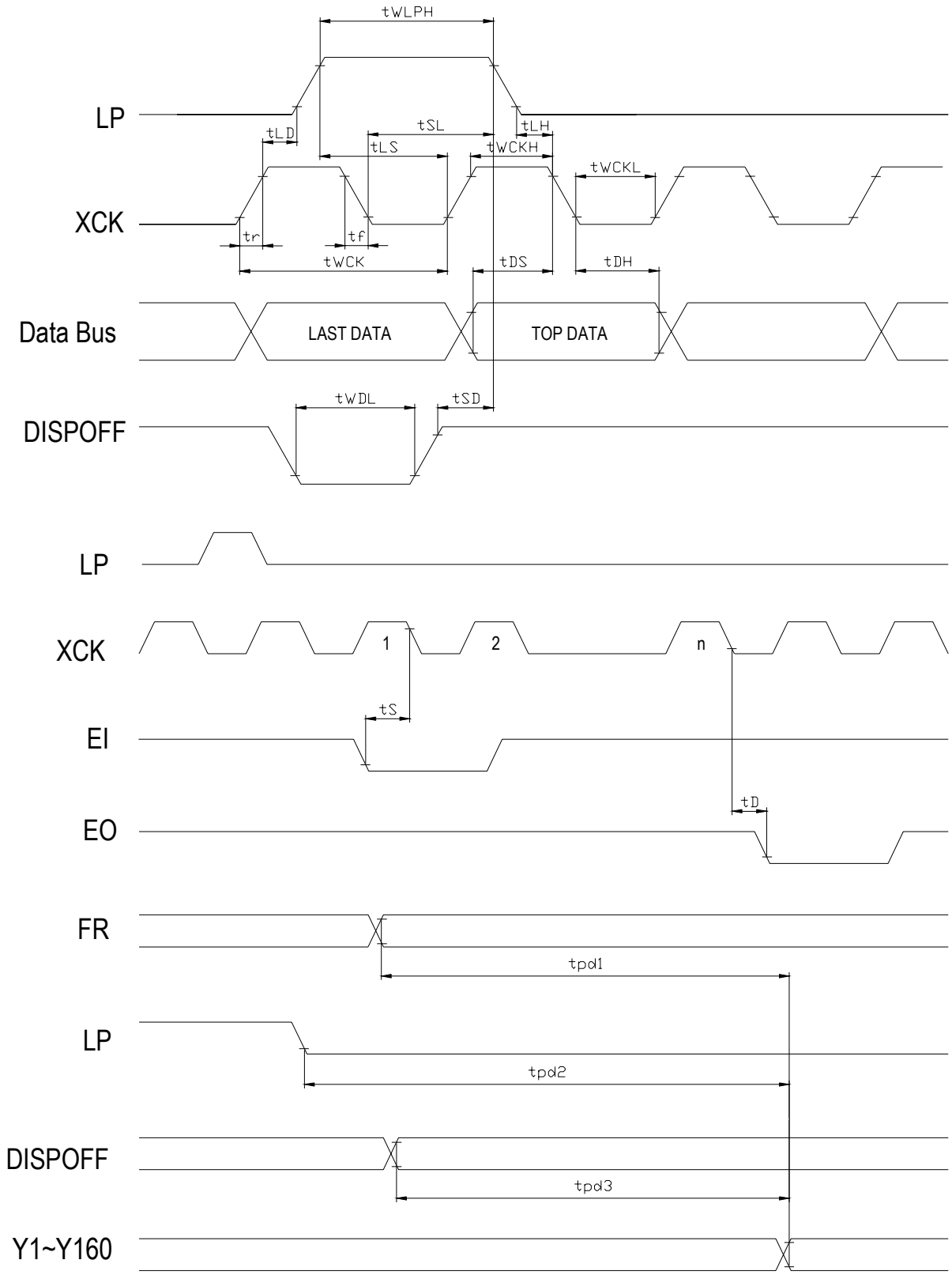

9. PIN ASSIGNMENT

LCD PIN ASSIGNMENT

PIN NO.	FUNCTION	SYMBOL
1	LCD BIAS VOLTAGE FOR NON-SELECT (COMMON DRIVER)	V5
2	LCD BIAS VOLTAGE FOR NON-SELECT (COMMON DRIVER)	V2
3	POWER SUPPLY FOR LCD DRIVER	VEE
4	POWER SUPPLY FOR THE LOGIC SYSTEM	VDD
5	INPUT/OUTPUT FOR CHIP SELECT OR DATA OF THE SHIFT REGISTER	FRAME
6	GROUND	VGND
7	LATCH PULSE INPUT / SHIFT CLOCK INPUT FOR THE SHIFT REGISTER	LOAD
8	GROUND	VSS
9	AC-CONVERTING SIGNAL INPUT FOR LCD DRIVER WAVEFORM	DF
10	CONTROL INPUT FOR DESELECT OUTPUT LEVEL	$\overline{\text{D.OFF}}$
11	DISPLAY DATA SHIFT CLOCK INPUT FOR SEGMENT MODE	CP
12	LCD BIAS VOLTAGE FOR NON-SELECT (SEGMENT DRIVER)	V4
13	LCD BIAS VOLTAGE FOR NON-SELECT (SEGMENT DRIVER)	V3
14	INPUT DATA SIGNAL	D3
15	INPUT DATA SIGNAL	D2
16	INPUT DATA SIGNAL	D1
17	INPUT DATA SIGNAL	D0
18	GROUND	VGND
19	GROUND	VSS
20	POWER SUPPLY FOR EL+	VEL B(+)
21	GROUND	VSS
22	POWER SUPPLY FOR EL-	VEL A(-)

10. PIN NO

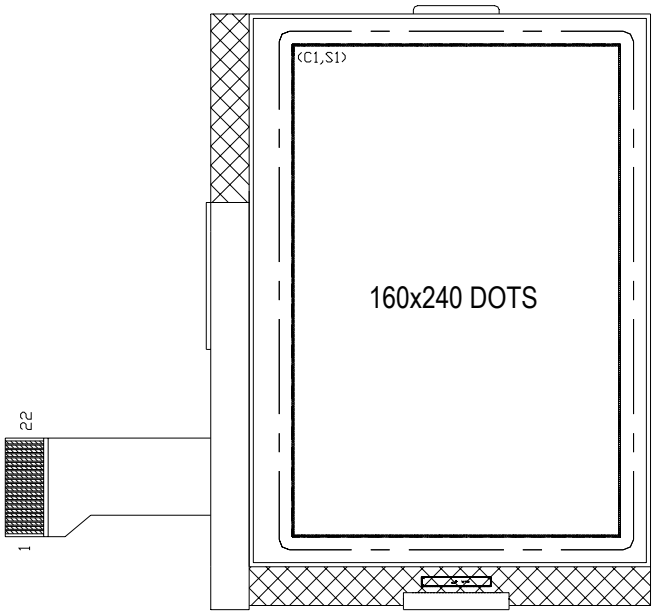

11. BLOCK DIAGRAM

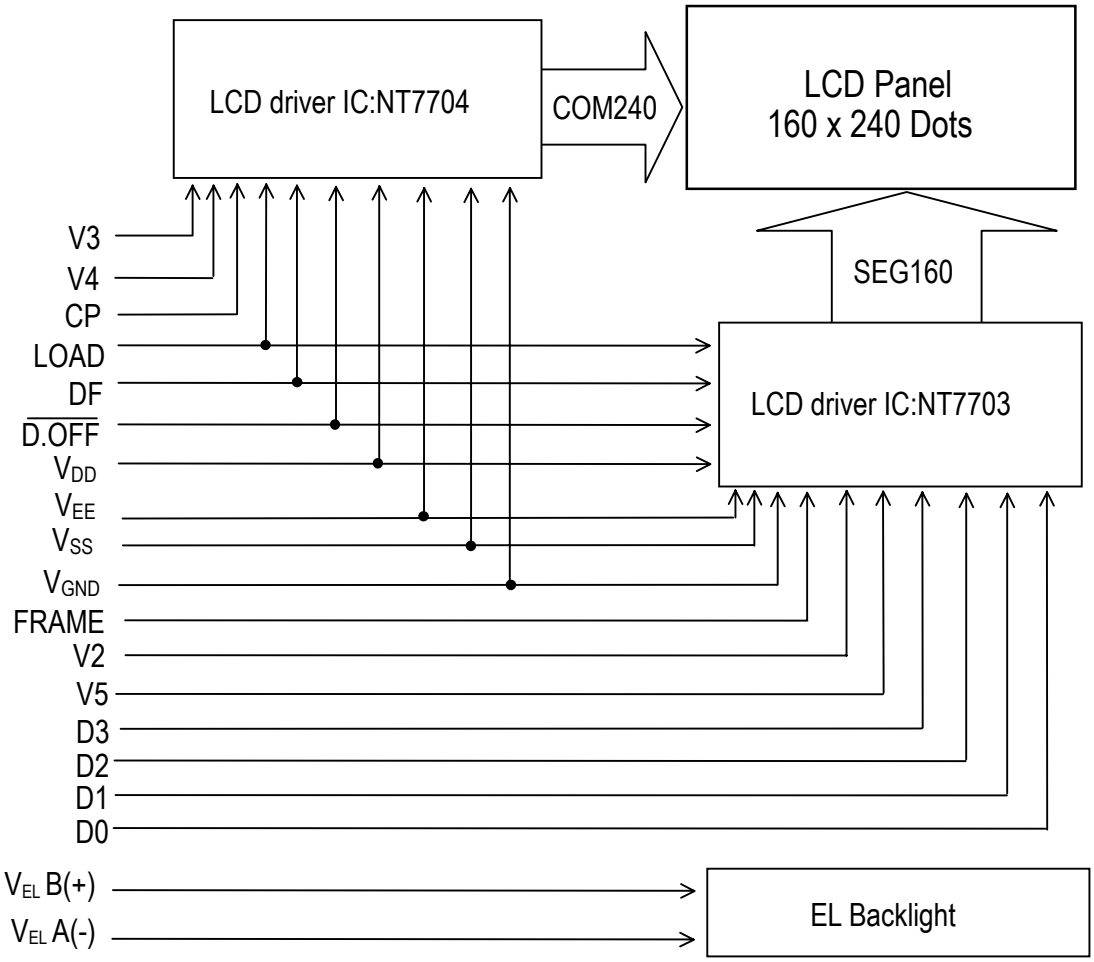

12. OUTLINE DIMENSION

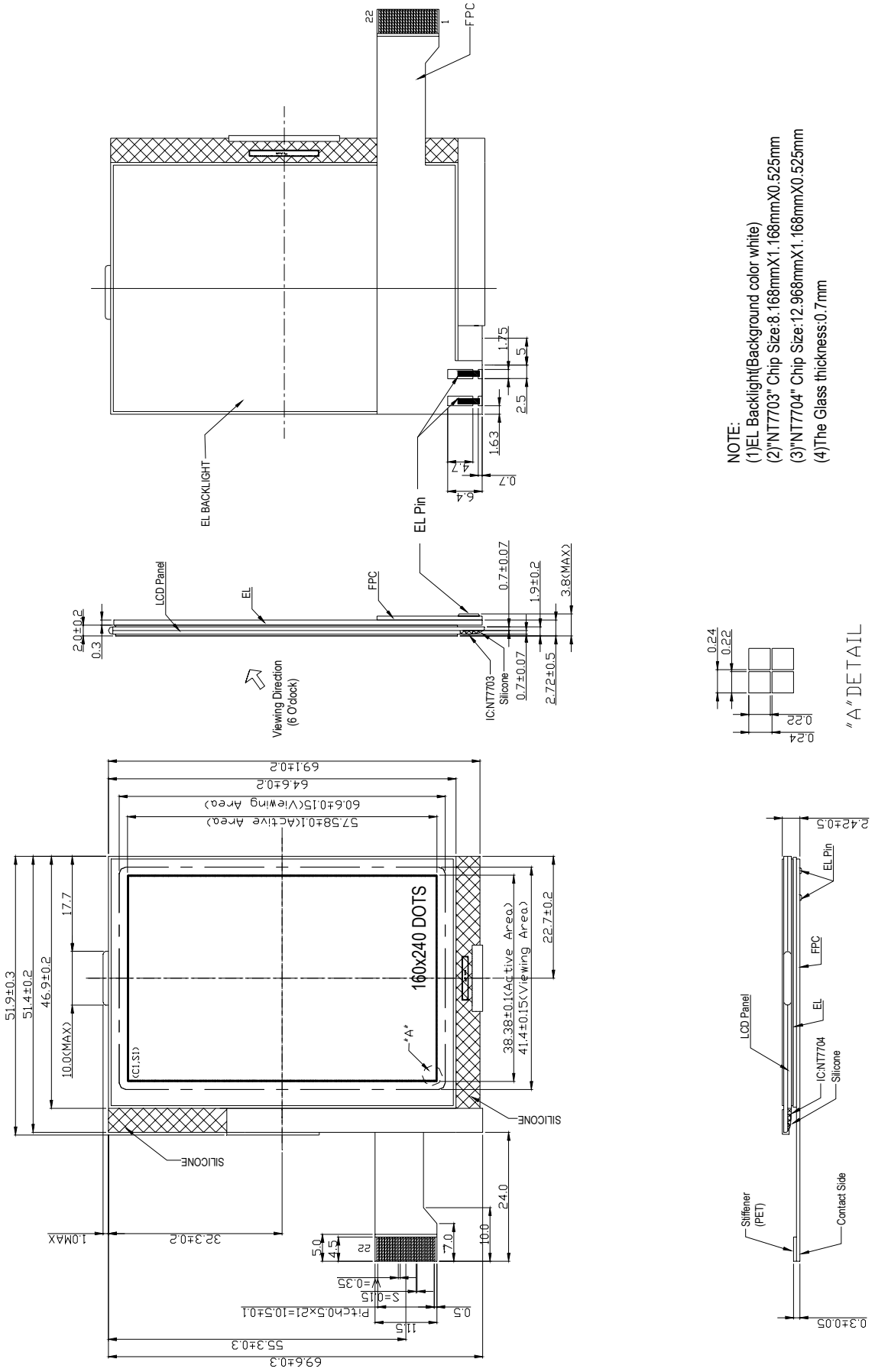

13.Example of LCD power supply

13-1 Reference example of LCD power supply(positive voltage)

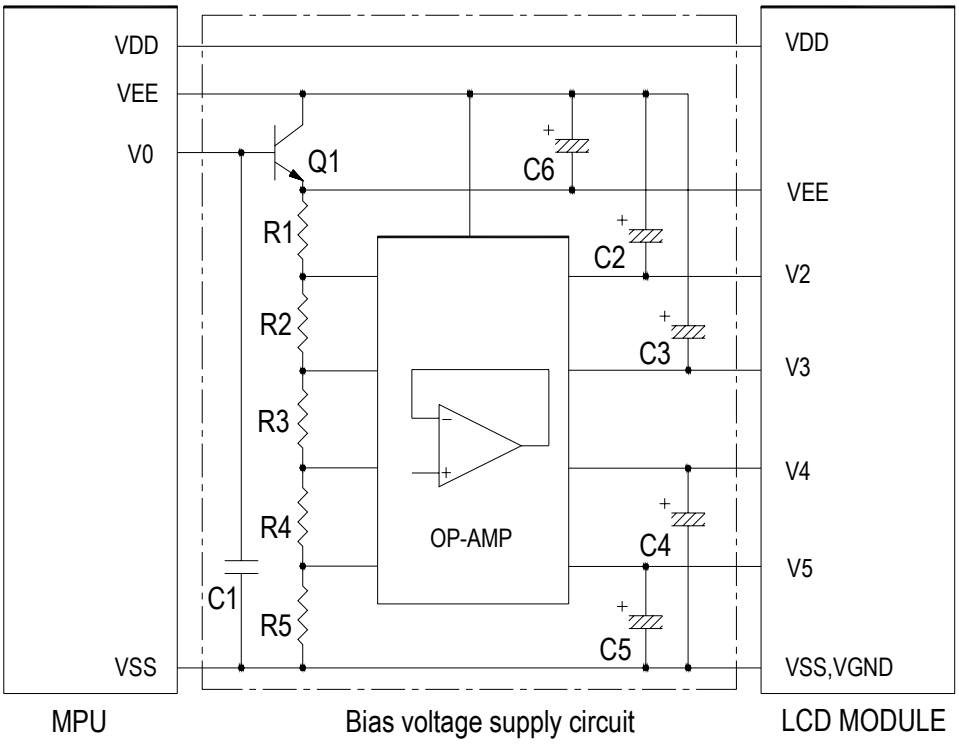

NOTE : LCD supply voltage VEE is positive voltage

13-2 Reference example of LCD power supply(negative voltage)

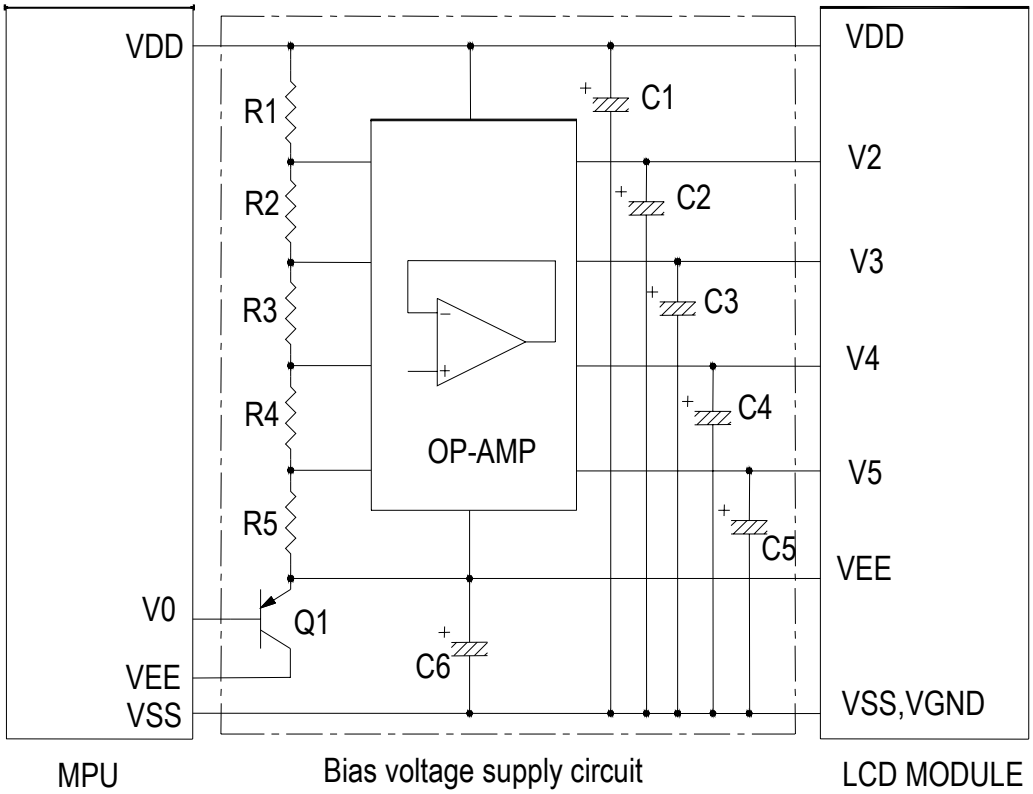

NOTE : LCD supply voltage VEE is negative voltage

14. ENVIRONMENTAL ABSOLUTE MAXIMUM RATINGS

14-1 TEMPERATURE RANGE

ITEM	SYMBOL	CONDITION	CRITERION
OPERATING TEMPERATURE	Topr	0℃～+50℃	NO DEFECT IN DISPLAYING AND OPERATIONAL FUNCTION
STORAGE TEMPERATURE	Tstg	-10℃～+60℃	NO DEFECT IN DISPLAYING AND OPERATIONAL FUNCTION

14-2 RELIABILITY CONDITIONS

ITEM	CONDITION	CRITERION
OPERATING TEMPERATURE	HIGH TEMPERTURE + 50℃ 240HRS	NO DEFECT IN DISPLAYING AND OPERATIONAL FUNCTION
	LOW TEMPERTURE 0℃ 240HRS	
STORAGE TEMPERATURE	HIGH TEMPERTURE + 60℃ 240HRS	NO DEFECT IN DISPLAYING AND OPERATIONAL FUNCTION
	LOW TEMPERTURE - 10℃ 240HRS	
HUMIDITY	40℃ 90%RH 240HRS	NO DEFECT IN DISPLAYING AND OPERATIONAL FUNCTION
VIBRATION	· Operating Time: thirty minutes exposure for each direction(X,Y,Z) · Sweep Frequency: 10～55Hz (1 min) · Max.acceleration:1.5G(14.7m/s^2)	NO DEFECT IN DISPLAYING AND OPERATIONAL FUNCTION
THERMAL SHOCK	-10℃(30mins) ←→+60℃(30mins) 10 cycles	NO DEFECT IN DISPLAYING AND OPERATIONAL FUNCTION
DROP IMPART	Drop 0.7m to strike a 30mm launch board in packing. Direction:3 directions(X，Y，Z)	NO DEFECT IN DISPLAYING AND OPERATIONAL FUNCTION

*NOTE: TEST CONDITION

(1)TEMPERATURE AND HUMIDITY: IF NO SPECIFICATION, TEMP. SET AT 25±2℃, HUMIDITY SET AT 60±5%RH

(2) OPERATING STATE: SAMPLES SUBJECT TO THE TESTS SHALL BE IN “ OPERATING” CONDITION

15. Code System of Production Lot

The production lot of module is specified on the back of PWB as follows;

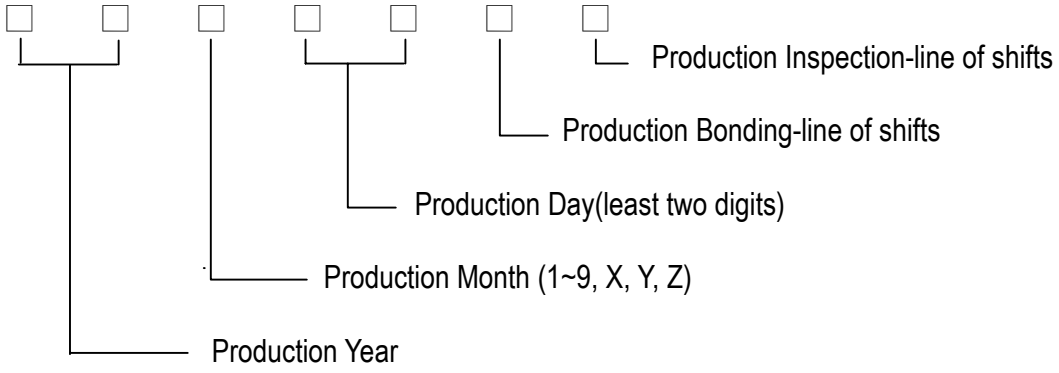

16.Precaution for Use

The following precautions should be followed, since this module contains precise parts.

(1) Do not store module for an extended periods of time under the conditions of high temperature and high humidity.
(2) Avoid using or storing the module in areas that expose it to direct sunlight or ultraviolet rays.
(3) Use protective finger covers when handling the module to avoid scratching or staining the module.
(4) Care should be taken not to expose the module to static electricity, because the module contains C-MOS LSI's.
(5) The LSI is sensitive to light.
The user's product should be designed so that LSI is not exposed to any light during operation.
(6) During installation, cover the display area with acrylic protection plates to protect the polarizer plate and LCD cells.
(7) Do not apply any excessive shocks to the module because the module contains sensitive LCD cells.
Do not use a module which has experienced strong mechanical shock.
(8) Care should be taken when the power supply turns on as following.
(a)Do not apply any input signals before the supplying voltage is applied.
(b)Do not turn off the power supply while any input signals are applied.

Caution

(1) Dangerous. Do not shock glass because glass can break.
(2) If module breaks, do not touch it directly.
(Glass could stick or cut skin.)
(3) Do not swallow Liquid Crystal.
(In case of broken LCD panel, do not swallow liquid crystal even if there is no proof that liquid crystal is poisonous.)
(4) If liquid crystal is exposed to skin, wash the area thoroughly with alcohol or soap.
(5) When disposing of the product, please observe industrial waste disposal laws in each country and district.
(6) In case of injury, give immediate treatment and consult with a doctor.
(7) This product is constructed precisely. Don't disassemble or modify.

※ Neglecting this mark can cause injury to humans and damage to materials.