Customer :

S P E C I F I C A T I O N

OF

AG320240B02(TV)-3KEB-TC

APR. 10, 2002

AGENA DISPLAYTECH LTD

1. Display specifications

1) FSTN Mode Transflective Display Type, Positive (Black & White),
3K : 3M polarizer (optional)

2) Viewing Angle : 6.O'clock direction

3) Driving Duty : 1/240 Duty, 1/13 Bias

4) Display Format : 320 x 240 Dot Matrix full Graphic

5) Display Colour : Background : Grey Display : Black

6) Interface Input Data : 8 Bits

7) Backlight : EL (Blue) with driver internally

2. Mechanical Specifications

1) Outline Dimensions : Refer to attached Outline Dimensions figure (page 13/13)

2) Viewing Area : 48.0 (W) x 60.4 (H)

3) Dot Size : 0.165 (W) x 0.16 (H)

4) Dot Pitch : 0.18 (W) x 0.175 (H)

5) Weight : 50 g (Approx.)

3. Electrical Specifications

3-1. Absolute Maximum Ratings

Item	Symbol	Value			Unit	Condition	Remark
		Min	Typ	Max			
Supply Voltage (Logic)	Vdd	- 0.3		7.0	V	Ta = 25 °C	
Supply Voltage (LCD Drive)	Vee	Vdd - 19		Vdd + 0.3	V	Ta = 25 °C	
Input Voltage	Vi	- 0.3		Vdd + 0.3	V	Ta = 25 °C	
Operating Temp	Ta	0		+50	°C	-	
Storage Temp	Tstg	-20		+70	°C	-	

3-2. Electrical Characteristics

NO	ITEM	SYMBOL	SPEC. VALUE			UNIT	CONDITION
			Min	Typ	Max		
1	Supply Voltage (Logic)	Vdd-Vss	2.7	3.3	5.5	V	
2	Supply Currrent (Logic)	Idd	-	-	53.0	mA	Vdd = 3.3 V Vee = - 5.0 V Ta =25 °C
3	Supply Current (LCD)	Iee	-	1.0	2.0		
4	Supply Voltage (LCD)	Vdd-Vo	20.4 19.6 18.8	21.5 20.7 19.9	22.6 21.8 21.0	V	Ta = 0 °C Ta = 25 °C Ta = 50 °C
4	Input Voltage -HIGH LEVEL-	Vih	0.7 Vdd	-	Vdd	V	
5	Input Voltage -LOW LEVEL-	Vil	0	-	0.3 Vdd	V	

3-3. Backlit - EL Unit

3-3-1. Absolute Maximum Ratings(Ta = 25 °C)

Characteristics	Symbol	Max	Unit
EL Voltage	Vel	150	Vrms
EL Frequency	f el	800	Hz

3-3-2. Electro-Optical Characteristics (Ta = 25 °C)

Item	Symbol	Standard Value			Unit	Applicable Terminal	Conditions
		Min	Typ	Max			
EL Voltage	Vel		100		Vrms		
EL Frequency	f el		400		Hz		*2)
EL Current	I el		12.3	15.7	mA		
Brightness	Cd/m2		60		Cdm		

*2) Operation at AC100Vrms, 400Hz
The Life of Half Brightness is 10,000 Hours(20 °C, 60%RH)

3-3-3. EL driver Electrical Specification

Parameter	Symbol	Condition	Min	Typ	Max	Unit	Remark
Supply Voltage	Vdd	-	2.5	3.3	5.5	V	
Operating Current	Idd	Vin = 3.0 V	-	22	-	mA	
Using Inductor	Lx	-	-	560	-	μH	
EL driver freq.	F out	Vin = 3.0 V	300	370	430	Hz	
Quiescent Vdd Current	Iq	EL ON =”L”	-	50	-	μA	

3-3-4. Touch Panel Electrical Specification

(Ta = 25 °C)

Parameter	Specification	Condition
ON Resistance	351 Ω ~ 702 Ω	X Axis
	154 Ω ~ 893 Ω	Y Axis
Insulating Resistance	More than 20MΩ	DC 25 V
Chattering	Less than 10 ms	DC 5 V, Load of resistance (1mA), Switching time 2m/sec
Endurable Voltage	25V for 1 min	

4. Power Supply &Contrast adjustment

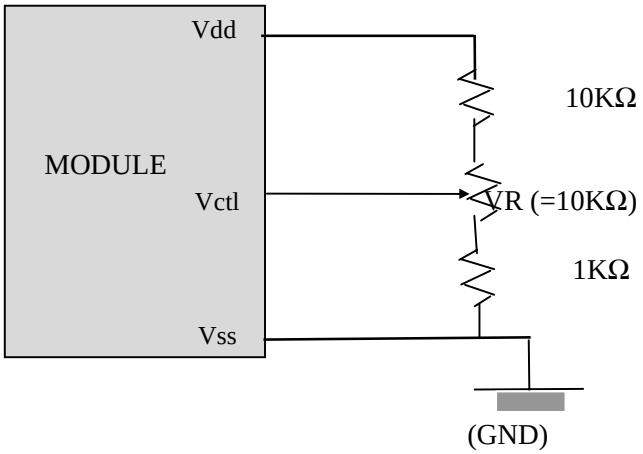

5. Electro-Optical Characteristics

Item	Symbol	Min.	Typ.	Max.	Unit	Condition	Note
Viewing Angle	$\theta_2 - \theta_1$	45	-		deg.	Cr = 2.0	1.2
	ϕ	- 90		+ 90			
Contrast Ratio	Cr	-	4	-	-	$\theta = 20°$ $\phi = 0°$	3
Response Time(Rise)	Tr	-	353		ms	$\theta = 20°$ $\phi = 0°$	4
Response Time(Fall)	Tf	-	167		ms	$\theta = 20°$ $\phi = 0°$	4

* Above data are measured under STN mode.

* ϕ= 0 means viewing direction.

Note 1: Definition of angle θ & ϕ.

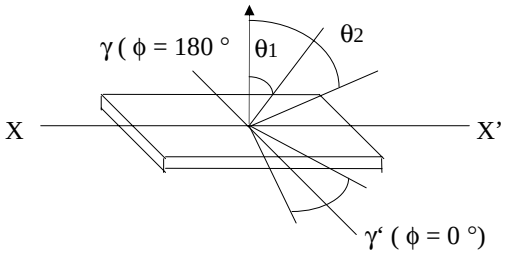

Note 2: Definition of viewing angle θ_1 & θ_2.

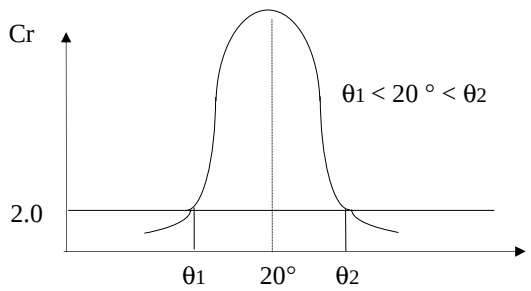

Note 3: Definition of contrast Cr

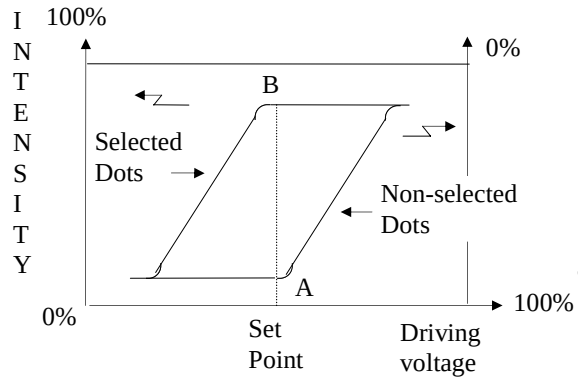

$Cr = (A/B)^{\rho}$ { Negative : P = -1
{ Positive : P = +1

Note 4: Definition of optical response

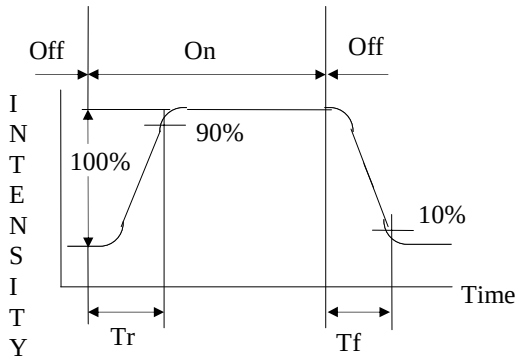

6. Pin Assignment

CN2 : with built-in Controller SED 1335

Pin No	Symbol	Level	Description
1	/RESET	H/L	Reset Signal
2	/R/D	H/L	80 Series : Read Signal 68 Series : Enable Signal (E)
3	/WR	H/L	80 Series : Write Signal 68 Series : R/W Signal
4	/CS	H/L	Chip Select Signal
5	A0	H/L	Data Type Selection
6~13	DB0~DB7	H/L	Data Bus Line (8 bits)
14	Vdd	3.3 V	Power Supply for Logic Circuit
15	Vss	0 V	Ground
16	Vctl	-	Contrast Adjustment
17	EL_ON	H/L	EL On/Off Signal, H: EL On, L: EL Off
18	/DISPOFF	H/L	Display Off Function
19	X1	-	Touch Panel Left Signal in X Axis
20	Y1	-	Touch Panel Upper Signal in Y Axis
21	X2	-	Touch Panel Right Signal in X Axis
22	Y2	-	Touch Panel Lower Signal in Y Axis
23	NC	-	No Connection
24	NC	-	No Connection

CN1 : without Controller

Pin No	Symbol	Level	Description
1 ~4	D0 ~D3	H/L	Data Bus Line (4 bits)
5	/DISPOFF	H/L	Display Off Function
6	FLM	H/L	Frame Signal Pin
7	M	H/L	AC Signal Input for LCD Driving Waveform
8	LP	H/L	Latch pulse input pin for display data
9	CP	H/L	Clock pulse input pin for display data
10	Vdd	3.3 V	Power Supply for Logic Circuit
11	Vss	0 V	Ground
12	EL_ON	H/L	EL On/Off Signal, H: EL On, L: EL Off
13	Vctl	-	Contrast Adjustment
14	NC	-	No Connection
15	X1	-	Touch Panel Left Signal in X Axis
16	Y1	-	Touch Panel Upper Signal in Y Axis
17	X2	-	Touch Panel Right Signal in X Axis
18	Y2	-	Touch Panel Lower Signal in Y Axis
19	NC	-	No Connection
20	NC	-	No Connection
21	NC	-	No Connection
22	NC	-	No Connection
23	EL1		EL light pin 1 (When driver not included)
24	EL2		EL light pin 2 (When driver not included)

7. Timing Characteristics

7-1. Segment mode AC Characteristics (condition : Vdd = + 3.3 V ± 10 %, Vss = 0 V)

Parameter	Symbol	Min	Max	Unit	Note
Shift clock period	Twck	125	-	ns	Tr,Tf ≤ 11ns, note 1
Shift clock "H" pulse width	Twckh	51	-	ns	
Shift clock "L" pulse width	Twckl	51	-	ns	
Data set up time	Tds	30	-	ns	
Data hold time	Tdh	40	-	ns	
Latch pulse "H" pulse width	Twlph	51	-	ns	
Shift clock rise to Latch pulse rise time	Tld	0	-	ns	
Shift clock fall to Latch pulse fall time	Tsl	51	-	ns	
Latch pulse rise to Shift clock rise time	Tls	51	-	ns	
Latch pulse fall to Shift clock fall time	Tlh	51	-	ns	
Input signal rise time	Tr	-	50	ns	Note 2
Input signal fall time	Tf	-	50	ns	Note 2
Enable set up time	Ts	36	-	ns	
DISPOFF Removal time	Tsd	100	-	ns	
DISPOFF enable pulse width	Twdl	1.2	-	μs	
Output delay time(1)	Td	-	78	ns	CL=15pF
Output delay time(2)	Tpd1, Tpd2	-	1.2	μs	CL=15pF
Output delay time(3)	Tpd3	-	1.2	μs	CL=15pF

Note : 1. Take the cascade connection into consideration
2. (Tck-Twckh-Twckl)/2 is maximum in the case of high speed operation

7-2. Common mode AC Characteristics

Parameter	Symbol	Min	Max	Unit	Note
Shift clock period	Twlp	250	-	ns	Tr,Tf ≤ 20ns
Shift clock "H" pulse width	Twlph	30	-	ns	
Data set up time	Tsu	30	-	ns	
Data hold time	Th	50	-	ns	
Input signal rise time	Tr	-	50	ns	
Input signal fall time	Tf	-	50	ns	
DISPOFF Removal time	Tsd	100	-	ns	
DISPOFF enable pulse width	Twdl	1.2	-	μs	
Output delay time(1)	Tdl	-	200	ns	CL=15pF
Output delay time(2)	Tpd1, Tpd2	-	1.2	μs	CL=15pF
Output delay time(3)	Tpd3	-	1.2	μs	CL=15pF

7-3. 8080 Family Controller Interface Timing

Parameter	Condition	Symbol	Min	Max	Unit	Remark
Address hold time	CL=100pF Vdd=2.7 ~ 4.5	tAH	10	-	ns	A0, /CS
Address set up time		tAW	0	-	ns	
System cycle time		tCYC	Note	-	ns	/WR, /RD
Strobe pulse width		tOC	150	-	ns	
Data set up time		tDS	120	-	ns	DB0 ~DB7
Data hold time		tDH	5	-	ns	
/RD Access time		tACC	-	80	ns	
Output disable time		tOH	10	55	ns	

Note : For memory control and system control commands :

tCYC = 2tC + tOC + tCEA + 75 > tACV + 245

For all other commands : tCYC = 4tC + tOC + 30

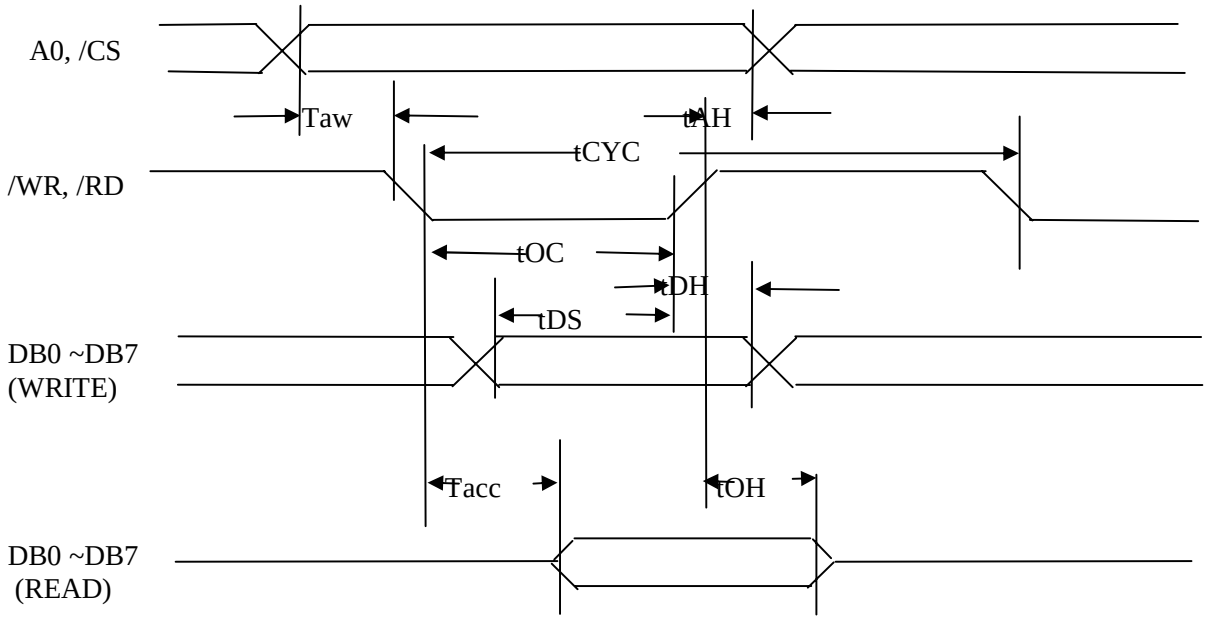

7-4. 6800 Family Controller Interface Timing

Parameter	Condition	Symbol	Min	Max	Unit	Remark
Address hold time	CL=100pF Vdd=2.7 ~ 4.5	tAH	0	-	ns	A0, /CS, /WR
Address set up time		tAW	10	-	ns	
System cycle time		tCYC	Note	-	ns	
Output disable time		tOH	10	75	ns	
Data set up time		tDS	120	-	ns	DB0 ~DB7
Data hold time		tDH	0	-	ns	
Access time		tACC	-	130	ns	
Enable pulse width		tEW	150	-	ns	E

Note : For memory control and system control commands :

tCYC = 2tC + tEW + tCEA + 75 > tACV + 245

For all other commands : tCYC = 4tC + tEW + 30

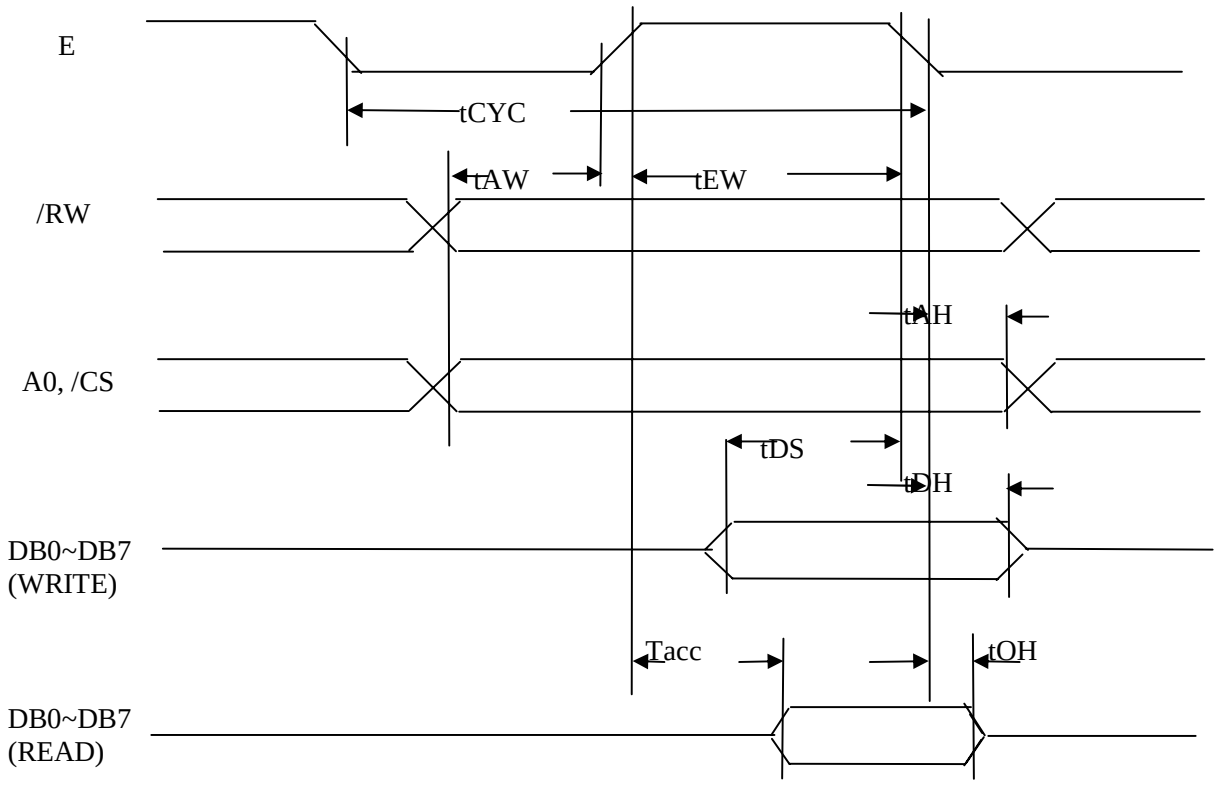

Note : tCYC indicates the interval during which CS is LOW and E is HIGH

7-5. Timing Chart of Input Signals

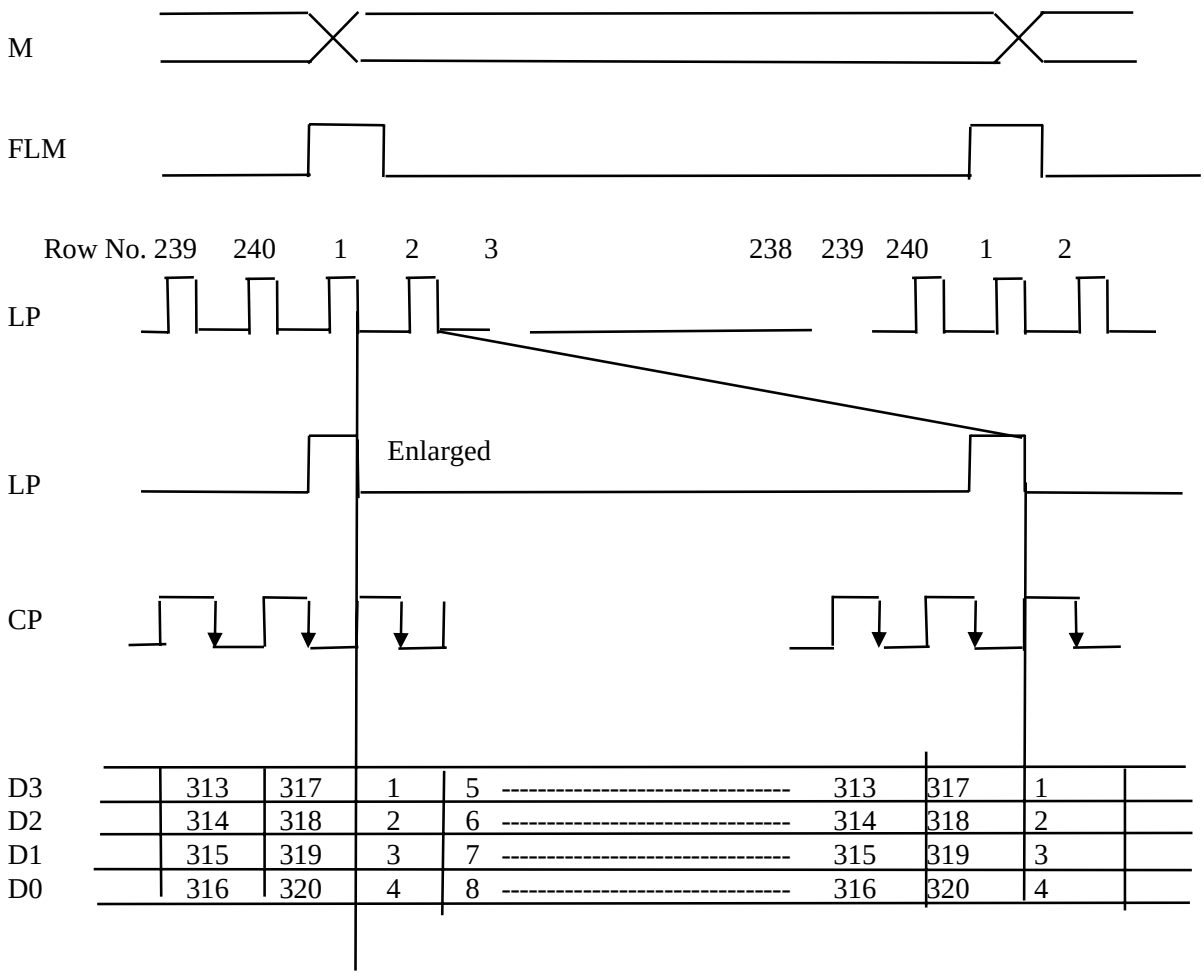

7-6. Display Data Format

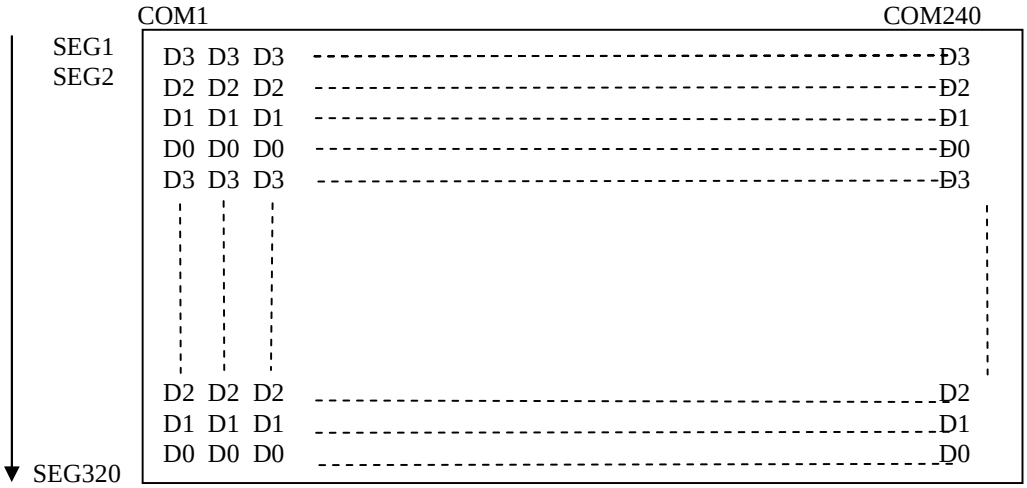

Potrait Display Type (Top View)

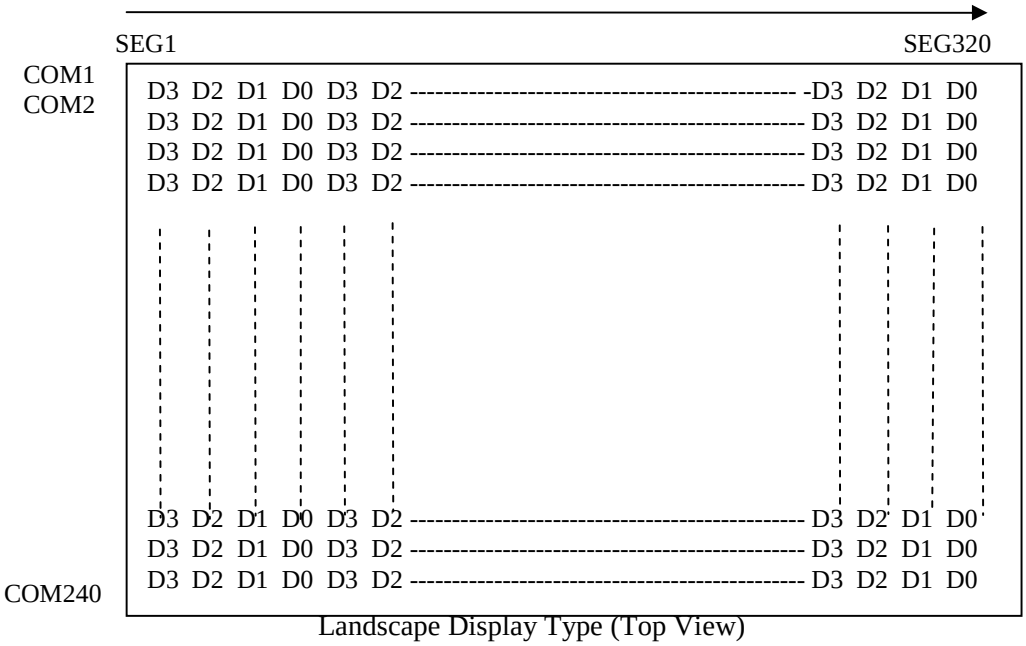

Landscape Display Type (Top View)

8. Block Diagram

(Contoller & Sram, DC/DC Converter & Touch panel are optional)

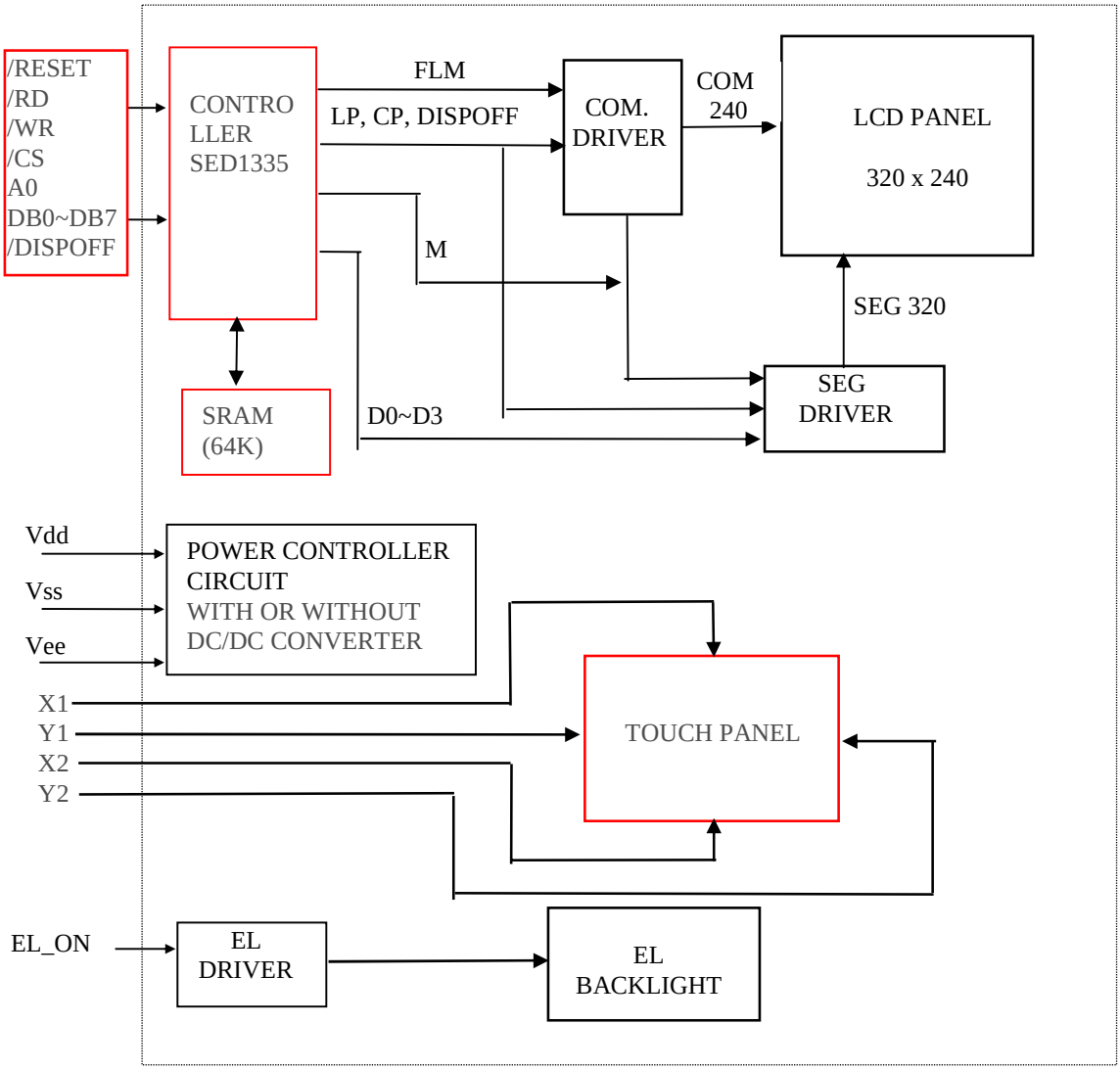

Note : Jumper Setting :

JP1 : Short pin1 & pin2 to use 8080Family, Short pin2 & pin3 to use 6800 Family
Default : Short pin1 & pin2

JP4 : Short pin1 & pin2 to shift data from C1 to C240, Short pin2 & pin3 to shift data from C240 to C1
Default : Short pin1 & pin2

JP5 : Short pin2 & pin3 to shift data from C1 to C240, Short pin1 & pin2 to shift data from C240 to C1
Default : Short pin2 & pin3

9. Instruction Set

Class	Command	Code											Hex	Command Description	Command read parameter	
		RD	WR	A0	D7	D6	D5	D4	D3	D2	D1	D0			No. of Byte	Section
System Control	System Set	1	0	1	0	1	0	0	0	0	0	0	40	Initialized Device and Display	8	8.2.1
	Sleep In	1	0	1	0	1	0	1	0	0	1	1	53	Enter Standby mode	0	8.2.2
Display control	DISP ON/OFF	1	0	1	0	1	0	1	1	0	0	D	58, 59	Enable and disable display and display flashing	1	8.3.1
	Scroll	1	0	1	0	1	0	0	0	1	0	0	44	Set display start address and display regions	10	8.3.2
	CSRForm	1	0	1	0	1	0	1	1	1	0	1	5D	Set cursor byte	2	8.3.3
	CGRAM Addr	1	0	1	0	1	0	1	1	1	0	0	5C	Set start address of character generator RAM	2	8.3.6
	CSRDir	1	0	1	0	1	0	1	1	1	CD1	CD0	4C to 4F	Set direction of cursor movement	0	8.3.4
	Hdot scr	1	0	1	0	1	0	1	1		1	0	5A	Set horizontal scroll position	1	8.3.7
	OVLAY	1	0	1	0	1	0	1	1	0	1	1	5B	Set display overlay format	1	8.3.5
Drawing Control	CSRW	1	0	1	0	1	0	0	0	1	1	0	46	Set cursor address	2	8.4.1
	CSRR	1	0	1	0	1	0	0	0	1	1	1	47	Read cursor address	2	8.4.2
Memory Control	Mwrite	1	0	1	0	1	0	0	0	0	1	0	42	Write to display memory	-	8.5.1
	MRead	1	0	1	0	1	0	0	0	0	1	1	43	Read from display memory	-	8.5.2

Note :

1. In general, the internal registers of the SED1335Fare modified as each command parameter is input. However, the microprocessor does not have to set all the parameters of a command and may send a new command before all parameters have been input. The internal registers for the parameters that have been input will have been changed but the remaining parameter registers are unchanged.
   2 bytes parameters (where two bytes are treated as 1 data item) are handled as following ;
   a. CSRW, CSRR : Each byte is processed individually. The microprocessor may read or write just the low byte of the cursor address.
   b. SYSTEM SET, SCROLL, CGRAM ADR : Both parameterbytes are processed together. If the command is changed after half of the parameter has been input, the single byte is ignored.
2. APL and APH are 2-byte parameters but are treated as two 1-byte parameters
3. Please refer to SED1335F LCD Controller Data Book for detail

10. External Dimension

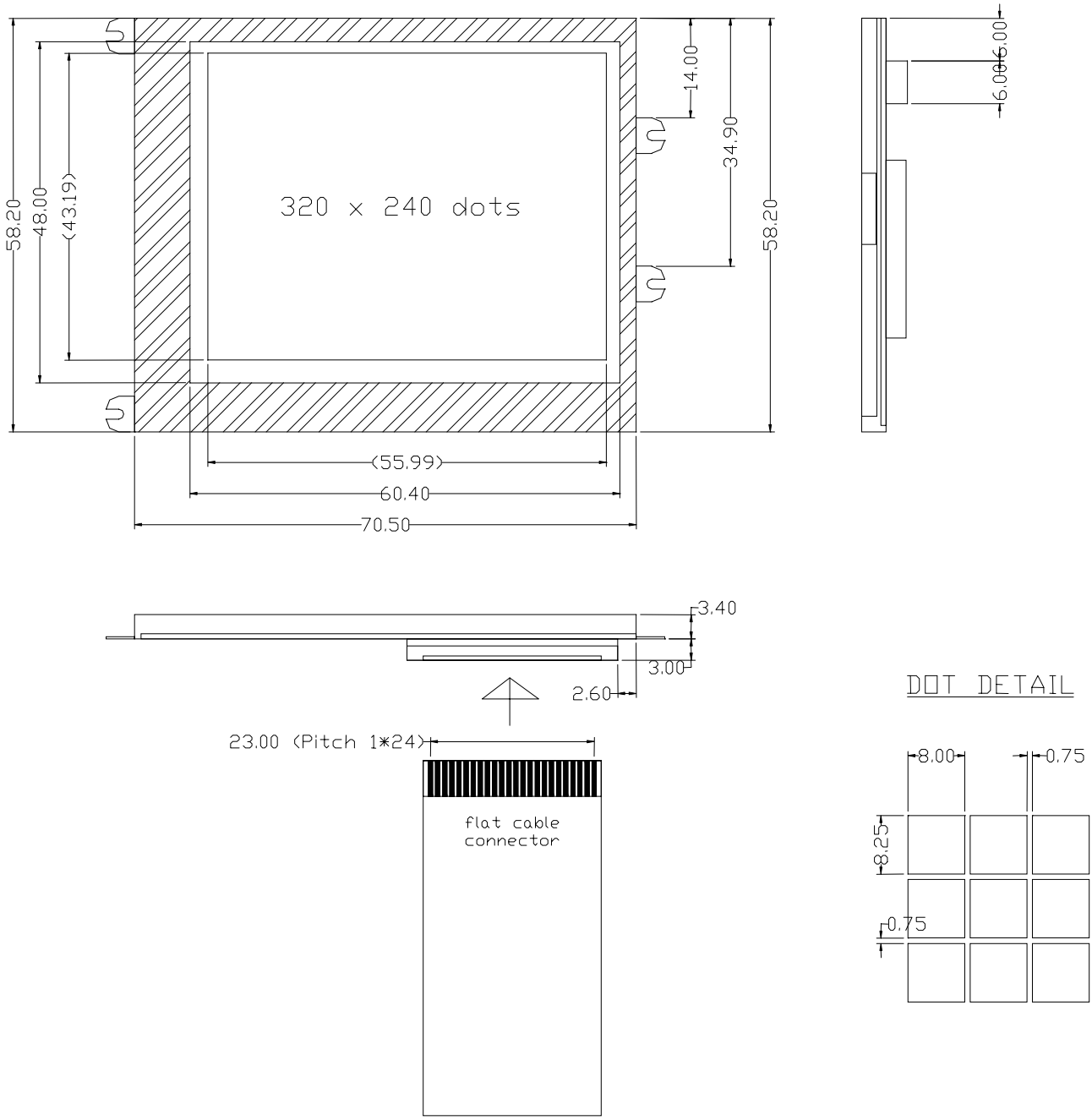

11. Numbering System (Graphic Modules)

AG □□□ □□□□ □□□ □□□ - □□□□□ - □ - □□□

(1) (2) (3) (4) (5) (6) (7) (8) (9) (10) (11) (12)

(1): Number of Row Dots

(2): Number of Column Dots

(3): Serial Number of Models

(4): Viewing Angle
NIL: 6 O'clock U: 12 O'clock

(5): Optional Items
T: Controller included V: DC-DC Converter included

(6): Display Mode
NIL: TN S: STN K: FSTN

(7): Temperature Tange
NIL: Normal W: Extended Temperature

(8): LCD Color mode
NIL: Natural Y: Yellow/Green G: Grey B: Blue

(9): Backlit
NIL: Without Backlit (Transflective LCD) D: LED Backlit (Transflective LCD)
L: LED Backlit (Transmissive LCD) EL: EL Backlit
P: CCFL Backlit

(10): Backlit Color
NIL: Without Backlit B: Blue R: Red
W: White Y: Yellow/Green

(11): Connector Type in Connecting Pins
C: Flat Cable H: Header N: Connector

(12): Client Code for Custom Design