11087 PS2

Advanced SMPS Analog and Digital Control Theory

© 2007 Microchip Technology Incorporated. All Rights Reserved.

Class Objectives

When you finish this class you will:

- Learn Analog and Digital Control Design Methodology
- Apply Learned Control Methodology in a Hands on Environment
- Understand Similarities Between Analog and Digital Control Design

© 2007 Microchip Technology Incorporated. All Rights Reserved.

Agenda

- **Introduction to Switch-Mode Power Converter (SMPC) Control Theory**
- **Analog Loop Closure**
  - Hands On Lab
- **Digital Loop Closure**
  - Hands On Lab
- **Summary**

© 2007 Microchip Technology Incorporated. All Rights Reserved.

Switch-Mode Power Converter (SMPC)

- **What is a SMPC?**
  - Chopping a DC voltage into an AC voltage which is then filtered to create a DC voltage
  - Controlling the "on-time" (duty cycle) of the AC voltage, controls the flow of energy
  - Use inductors and capacitors as filters for pulsed voltage waveforms
  - Use transformers to create isolation boundaries and transition high to low voltage interfaces

© 2007 Microchip Technology Incorporated. All Rights Reserved.

SMPC Loop Closure

- **Why "close the loop"?**
  - **Feedback control determines the performance of the SMPC in terms of line regulation, load regulation, and dynamic response**
  - **Open-loop gain T(s) determines how much error results from a disturbance compared to the result if the loop was open**

© 2007 Microchip Technology Incorporated. All Rights Reserved.

Analog Loop Closure

© 2007 Microchip Technology Incorporated. All Rights Reserved.

Analog SMPC Loop Closure

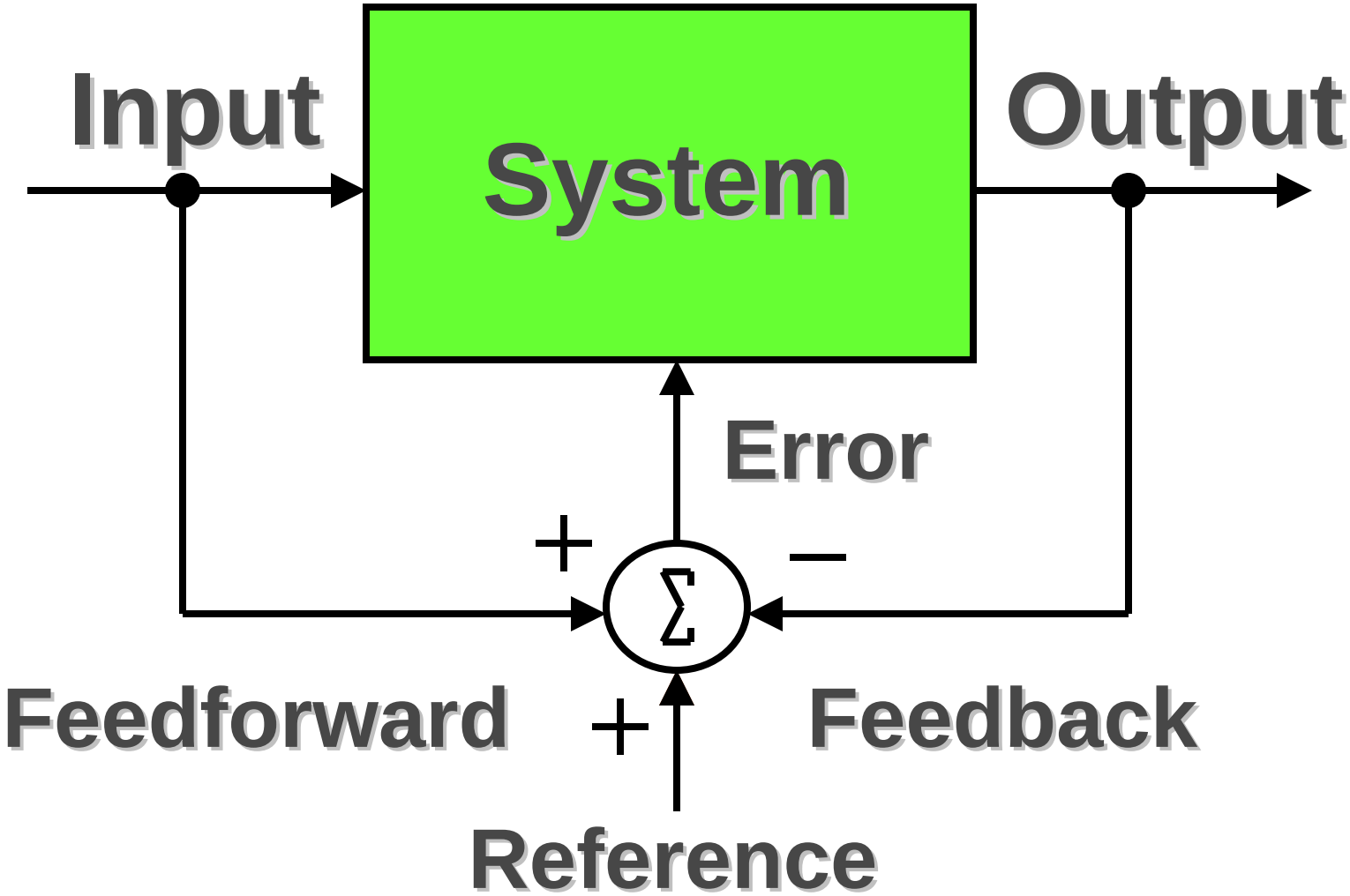

© 2007 Microchip Technology Incorporated. All Rights Reserved.

Analog SMPC Loop Closure

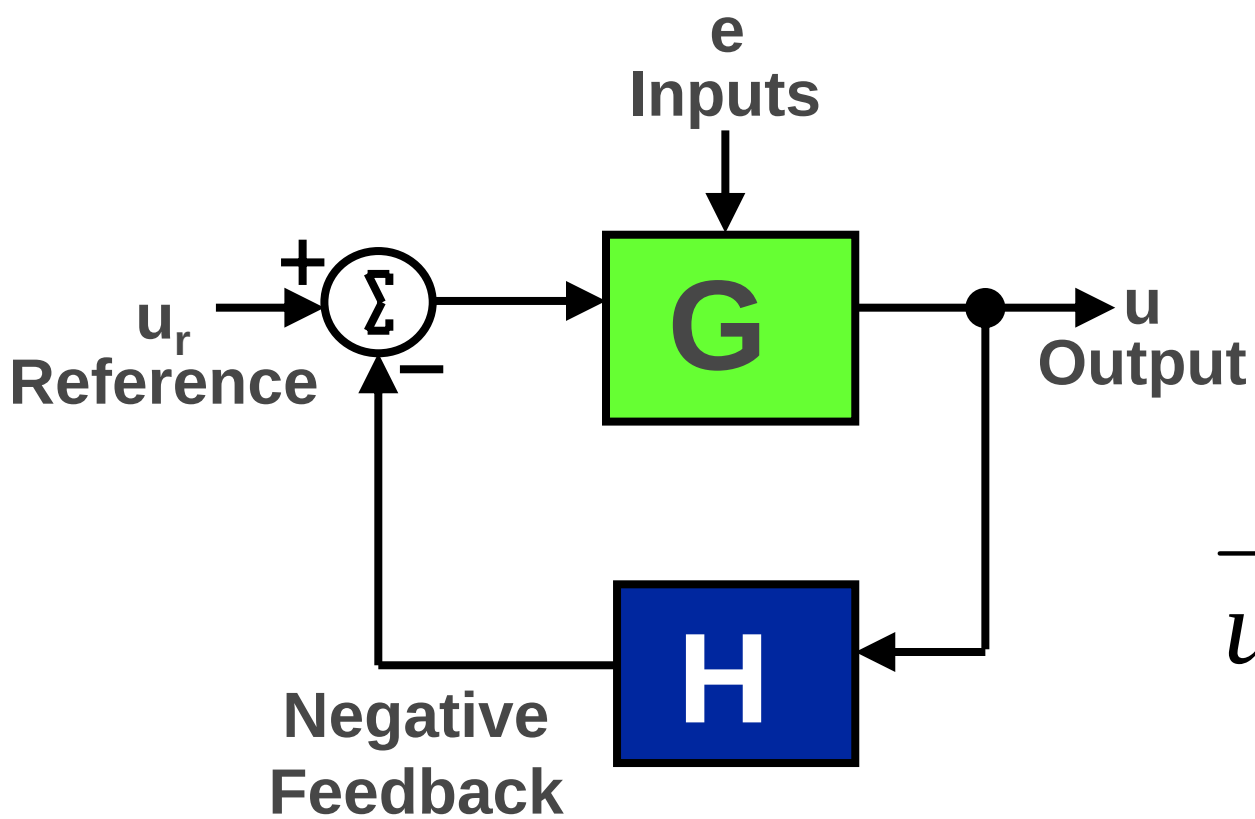

$$u = G \cdot u_r$$

$$\frac{u}{u_r} = \frac{G}{1+GH}$$

$$\frac{u}{u_r} = \frac{1}{H}$$

© 2007 Microchip Technology Incorporated. All Rights Reserved.

Analog SMPC Loop Closure

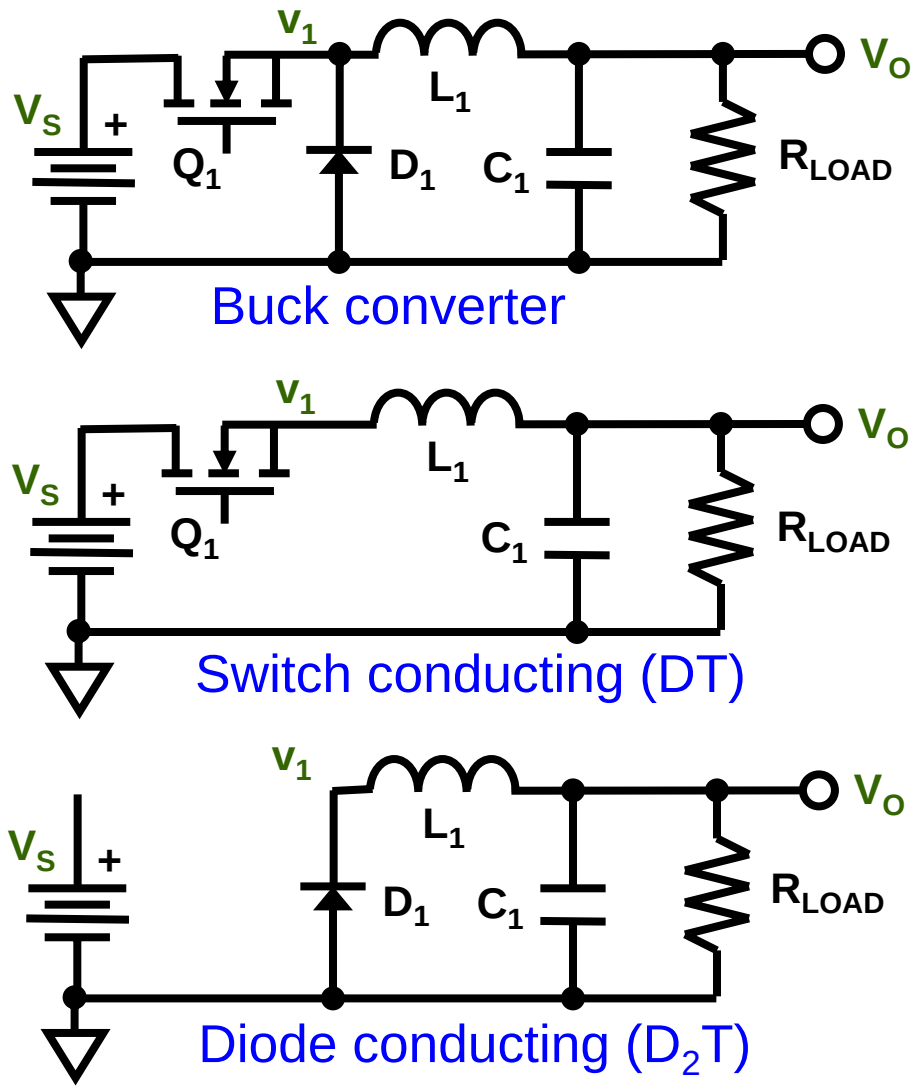

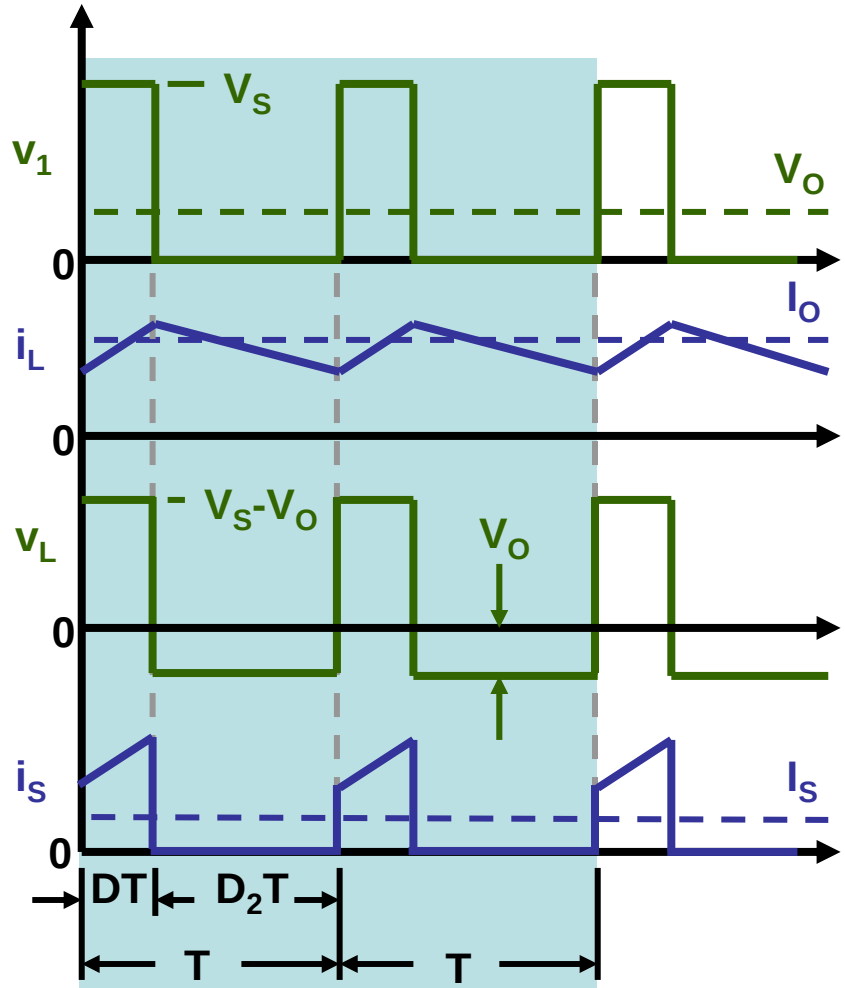

© 2007 Microchip Technology Incorporated. All Rights Reserved.

Analog SMPC Loop Closure

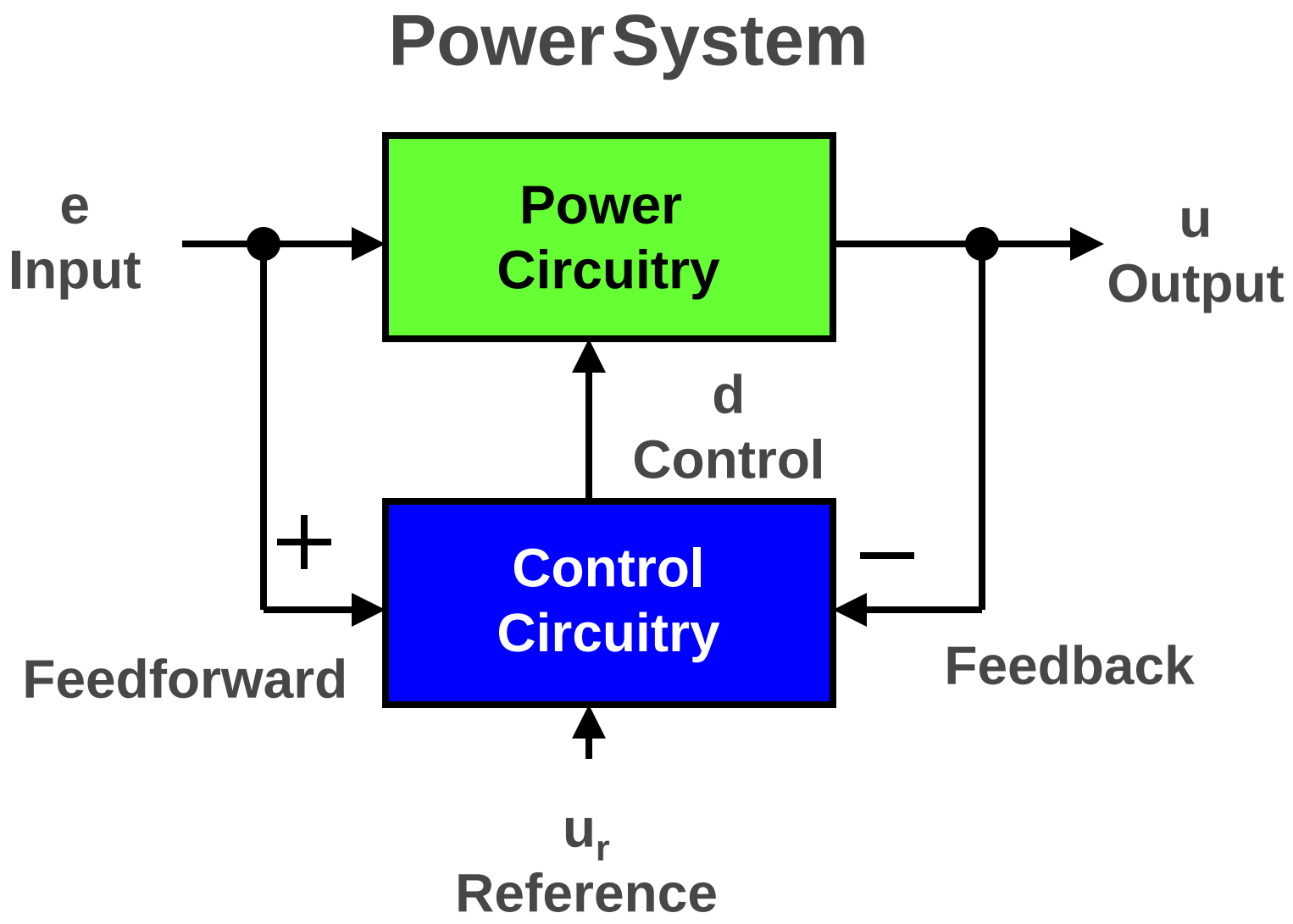

© 2007 Microchip Technology Incorporated. All Rights Reserved.

Analog SMPC Loop Closure

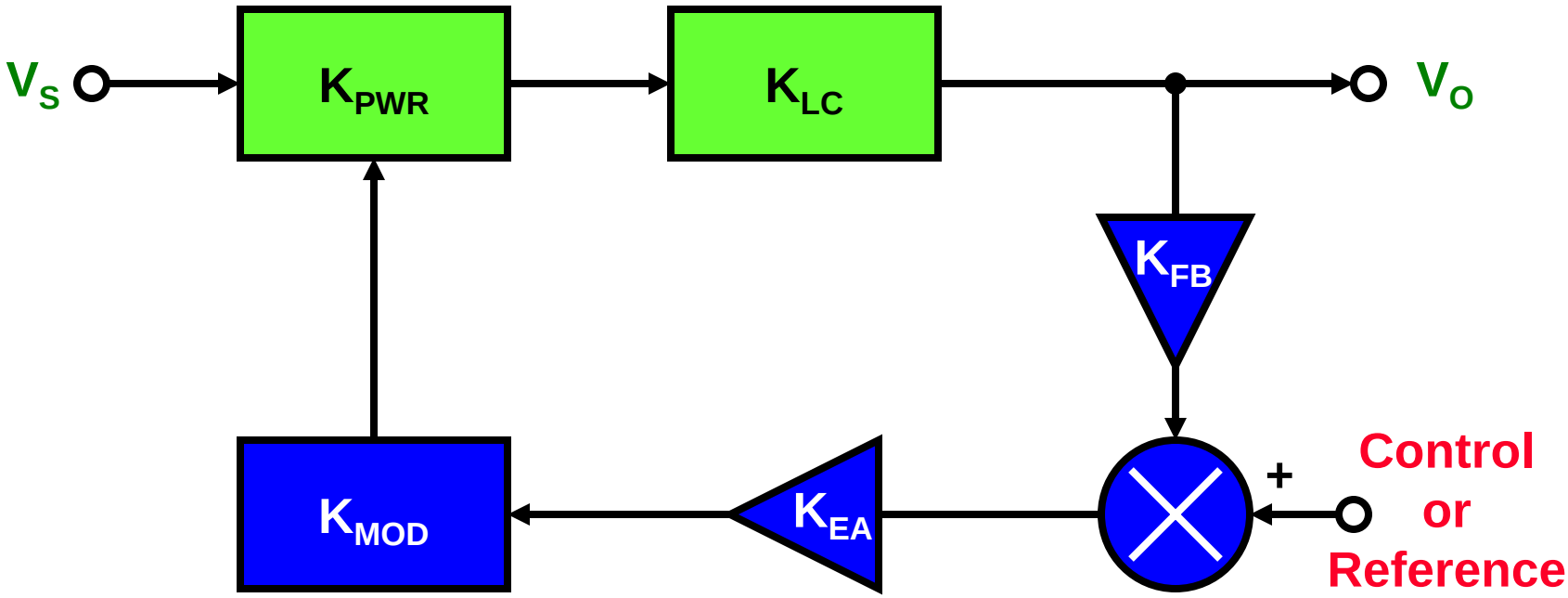

$K_{EA(S)}$	Error Amplifier with compensation
K_{MOD}	Pulse width modulator
K_{PWR}	Power switching topology
$K_{LC(S)}$	Output power filter
K_{FB}	Feedback

$T(s) = K_{EA(S)} * K_{MOD} * K_{PWR} * K_{LC(S)} * K_{FB}$ Open-loop gain

© 2007 Microchip Technology Incorporated. All Rights Reserved.

Analog SMPC Loop Closure

Natural Sampling Modulator

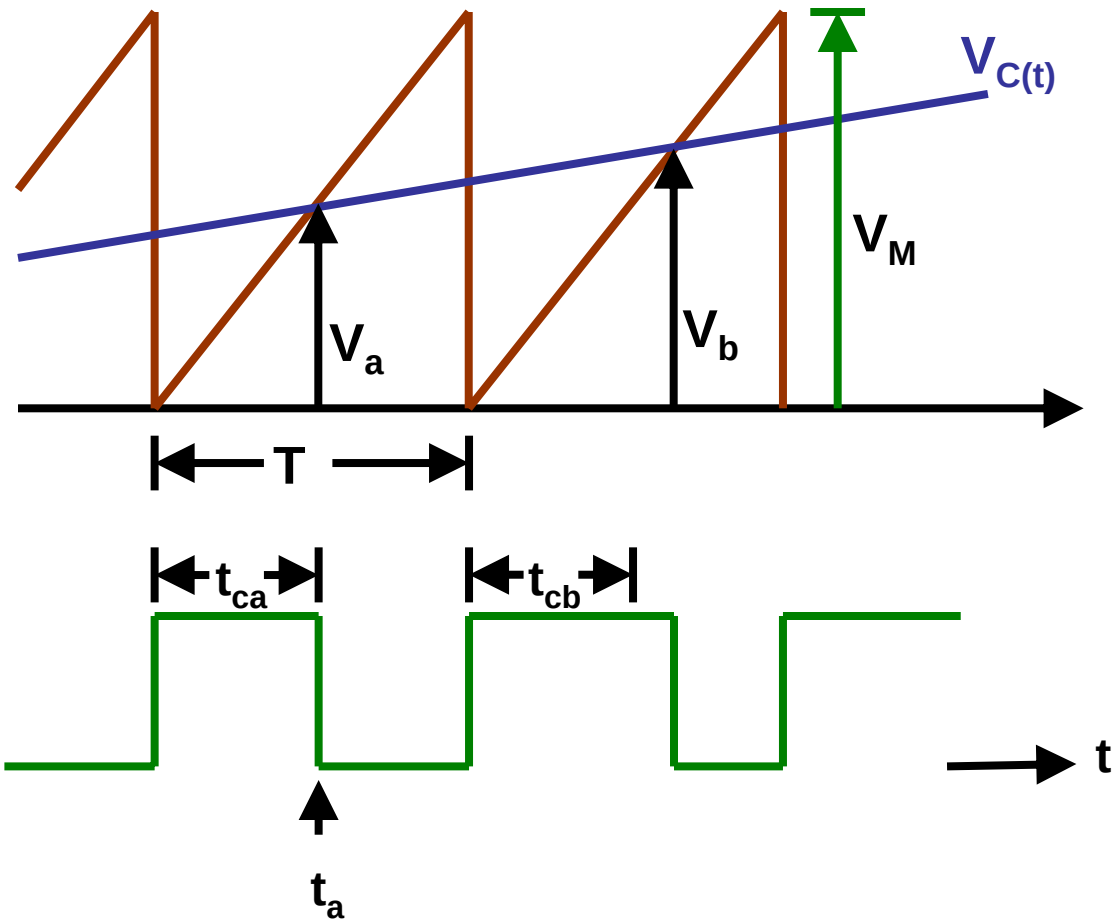

$$v_a = \frac{V_M}{T} * t_{ca}$$

$$v_b = \frac{V_M}{T} * t_{cb}$$

$$\frac{D}{V_C} = \frac{1}{V_M}$$

© 2007 Microchip Technology Incorporated. All Rights Reserved.

Analog SMPC Loop Closure

Uniform-Sampled Modulator

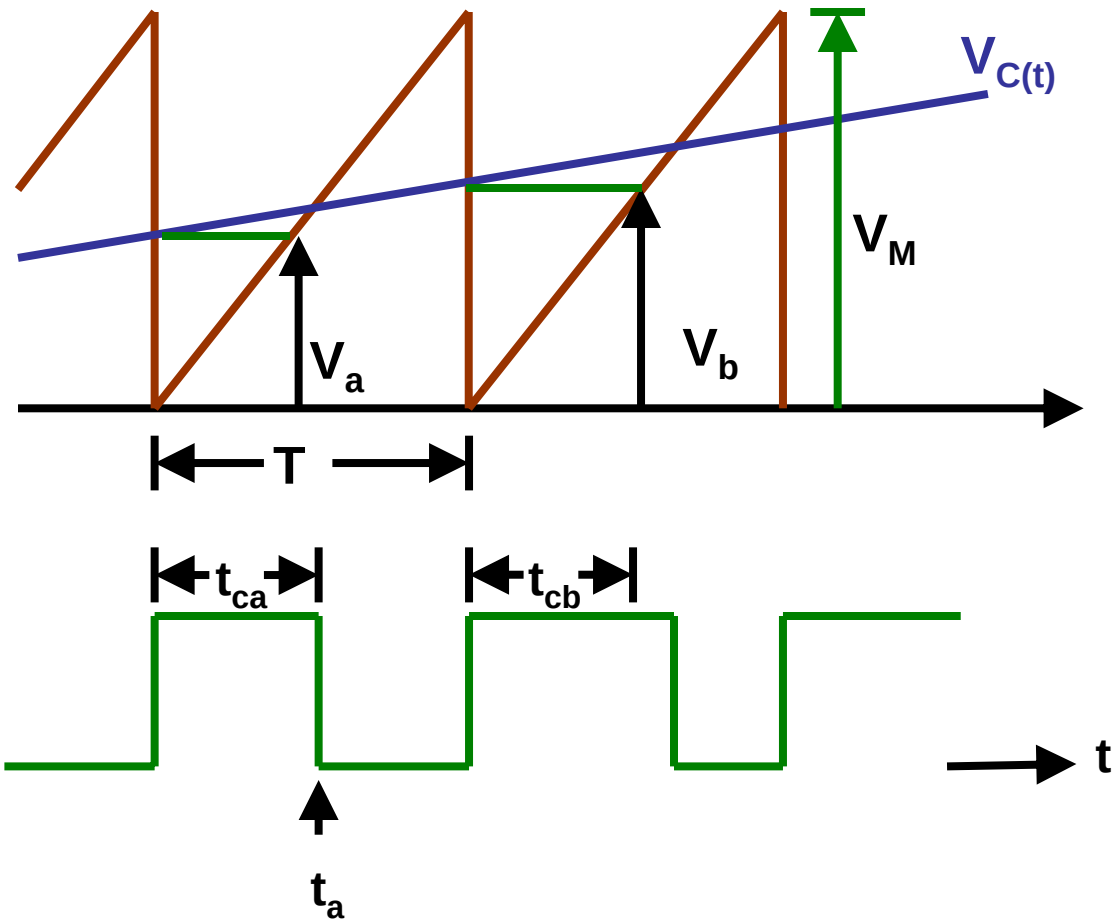

$$\frac{D}{V_C} = \frac{1}{V_M} * \left(\frac{1}{1 + sTD} \right)$$

© 2007 Microchip Technology Incorporated. All Rights Reserved.

Circuit Linearization

- **Need average values of quantities of interest**
- **Averaging techniques**
  - State-Space Averaging
  - Injected-Absorbed Current Averaging
  - Others

© 2007 Microchip Technology Incorporated. All Rights Reserved.

State Space Averaging

- **Mathematical model of a physical system whose variables are related by first-order differential equations**
- **Convenient & compact way to model and analyze systems with multiple inputs and outputs**
- **Also known as time domain analysis**

© 2007 Microchip Technology Incorporated. All Rights Reserved.

State Variables

- **Smallest possible system variables that can represent the entire state of the system at any given time**
- **For an electrical system:**

Capacitor Voltage:

$$i_C = C\frac{dv_C}{dt}$$

Inductor Current:

$$v_L = L\frac{di_L}{dt}$$

© 2007 Microchip Technology Incorporated. All Rights Reserved.

State Space Averaging: Buck Converter

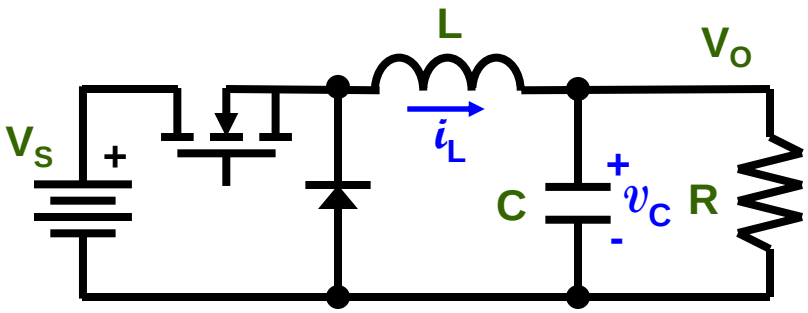

- **State variables:**

$$i_L \, , \, v_C$$

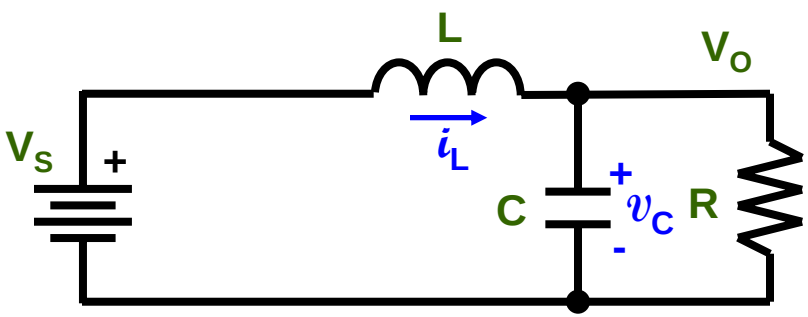

- **KVL w\ switch on:**

$$\frac{di_L}{dt} = \left[\frac{-Rr_L - Rr_C - r_L r_C}{L(R+r_C)}\right] i_L - \left[\frac{R}{L(R+r_C)}\right] v_C + \frac{1}{L} V_S$$

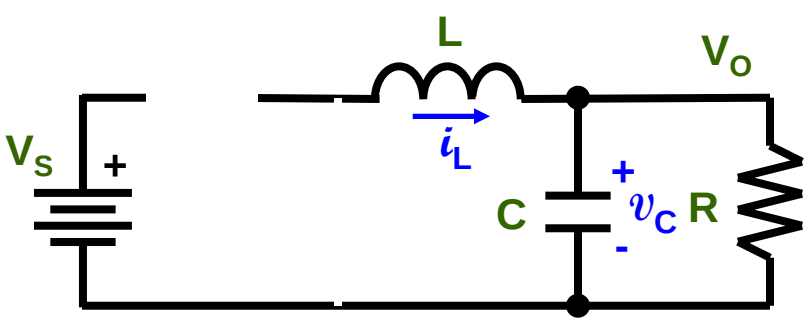

- **KVL w\ switch off:**

$$\frac{dv_C}{dt} = \left[\frac{R}{r_C C + RC}\right] i_L - \left[\frac{1}{r_C C + RC}\right] v_C$$

© 2007 Microchip Technology Incorporated. All Rights Reserved.

State Space Averaging: Buck Converter

- After solving state equations in terms of state variables and applying Laplace transform
- Open loop transfer function:

$$H(s) = \frac{1 + s r_C C}{LC\left\{ s^2 + s\left[\frac{1}{CR} + \frac{r_C + r_L}{L} \right] + \frac{1}{LC} \right\}}$$

© 2007 Microchip Technology Incorporated. All Rights Reserved.

SMPC Control Methods

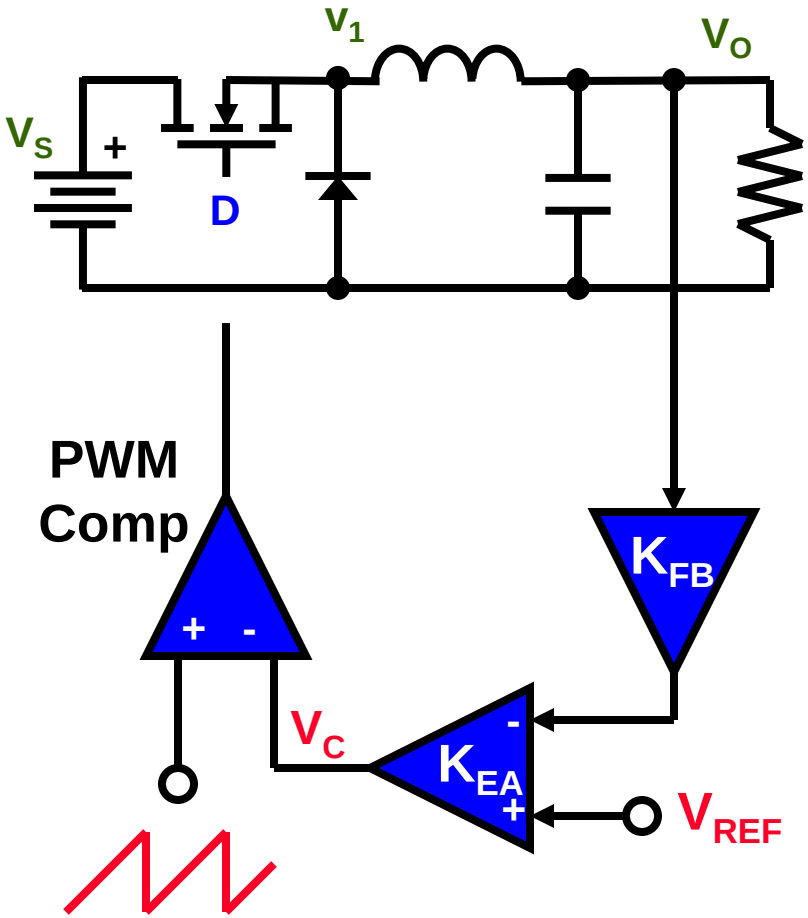

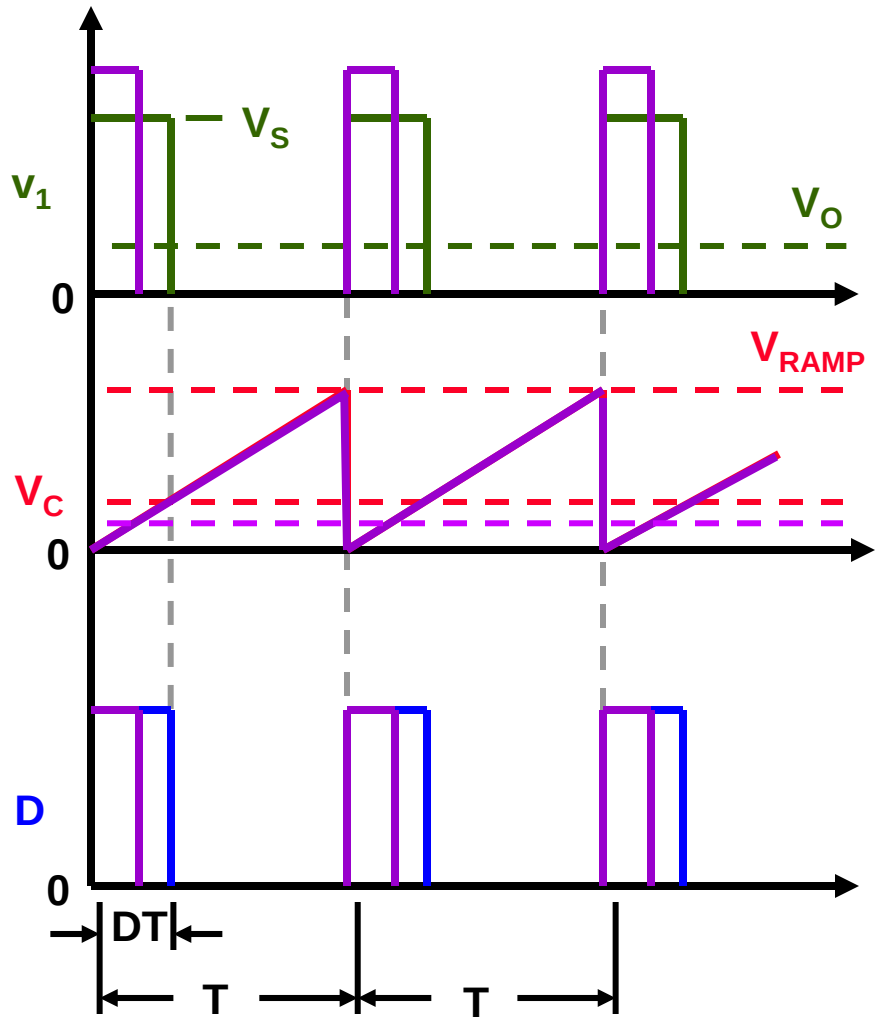

DIRECT DUTY CYCLE CONTROL (VOLTAGE MODE CONTROL)

© 2007 Microchip Technology Incorporated. All Rights Reserved.

Voltage Mode SMPC Control Methods

- Advantages
  - Single feedback loop
  - Good noise immunity
  - Good cross regulation for multiple outputs
- Disadvantages
  - Poor dynamic response
  - Error amplifier must account for double pole LC in CCM (complex conjugate poles)
  - Loop gain varies with input voltage

© 2007 Microchip Technology Incorporated. All Rights Reserved.

SMPC Loop Closure

- Loop Design Procedure
  - Define the control loop strategy and plot the tentative goal
  - Plot the known part of the loop
    - Bode plot of K_{MOD}* K_{PWR}* $K_{LC(S)}$* K_{FB}
  - Define the crossover frequency
  - Design and plot the error amplifier compensation network

© 2007 Microchip Technology Incorporated. All Rights Reserved.

Bode Plots - Single Pole

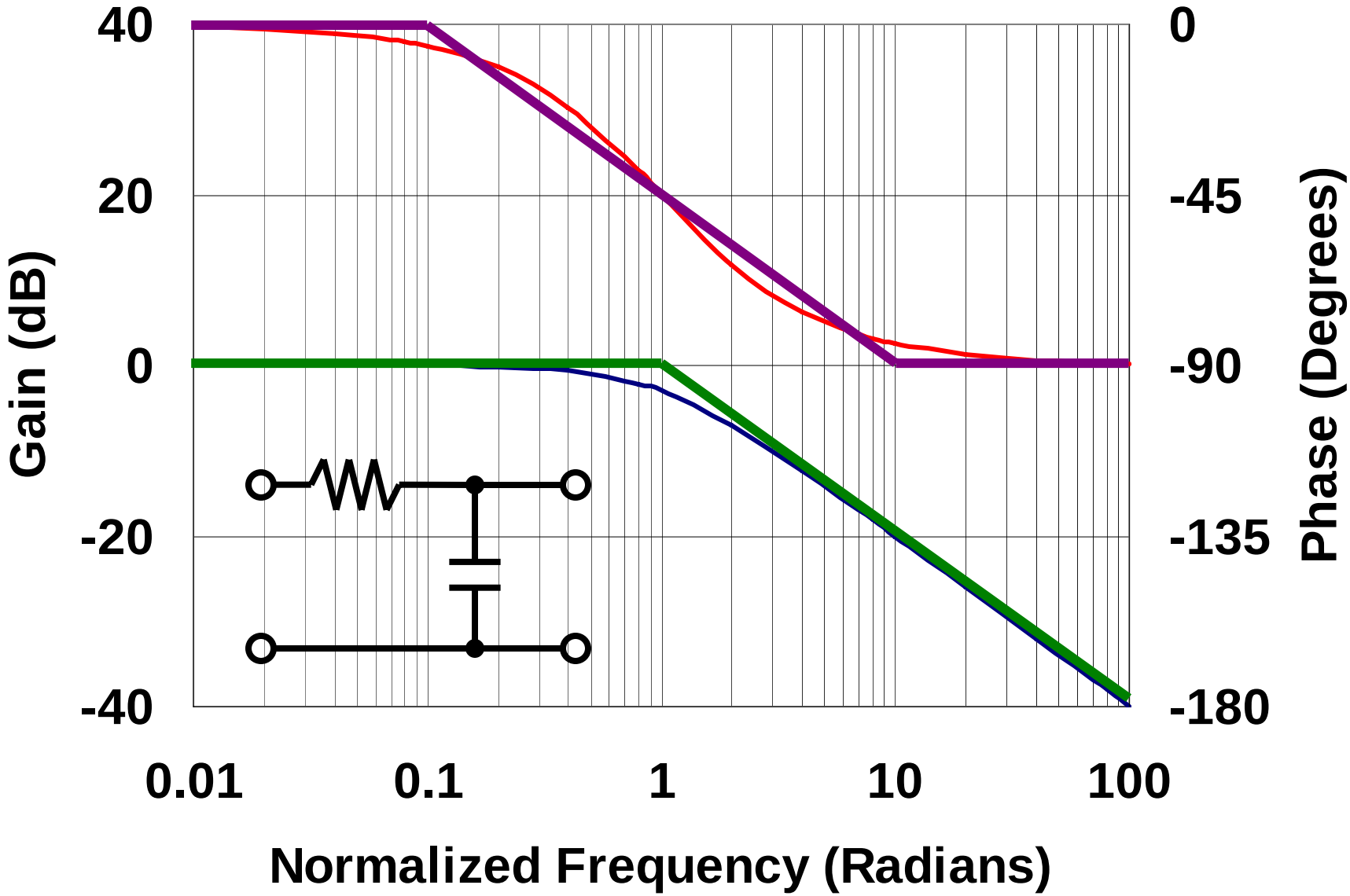

© 2007 Microchip Technology Incorporated. All Rights Reserved.

Bode Plots - Single Zero

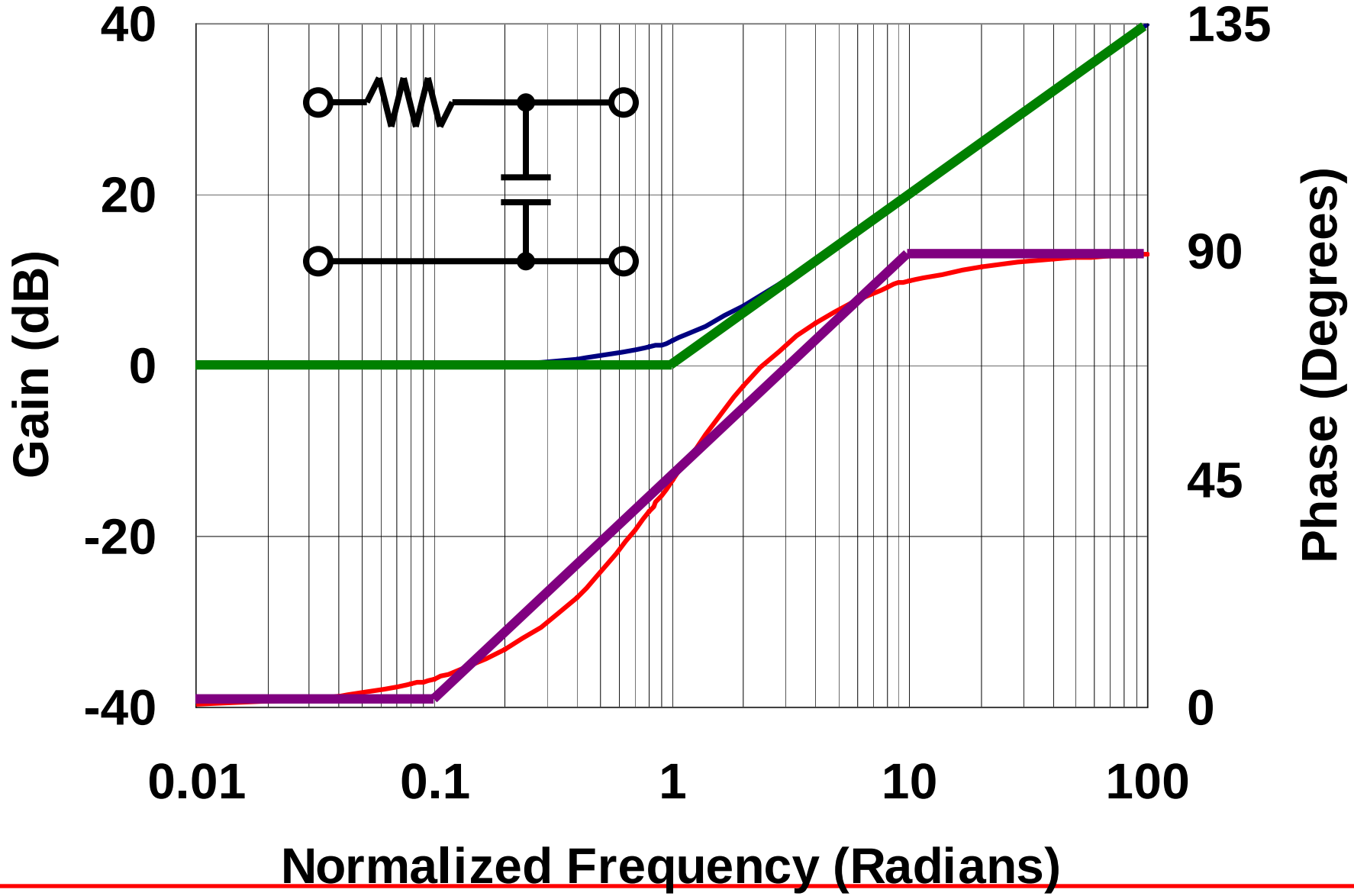

© 2007 Microchip Technology Incorporated. All Rights Reserved.

Bode Plots - Resonant LC

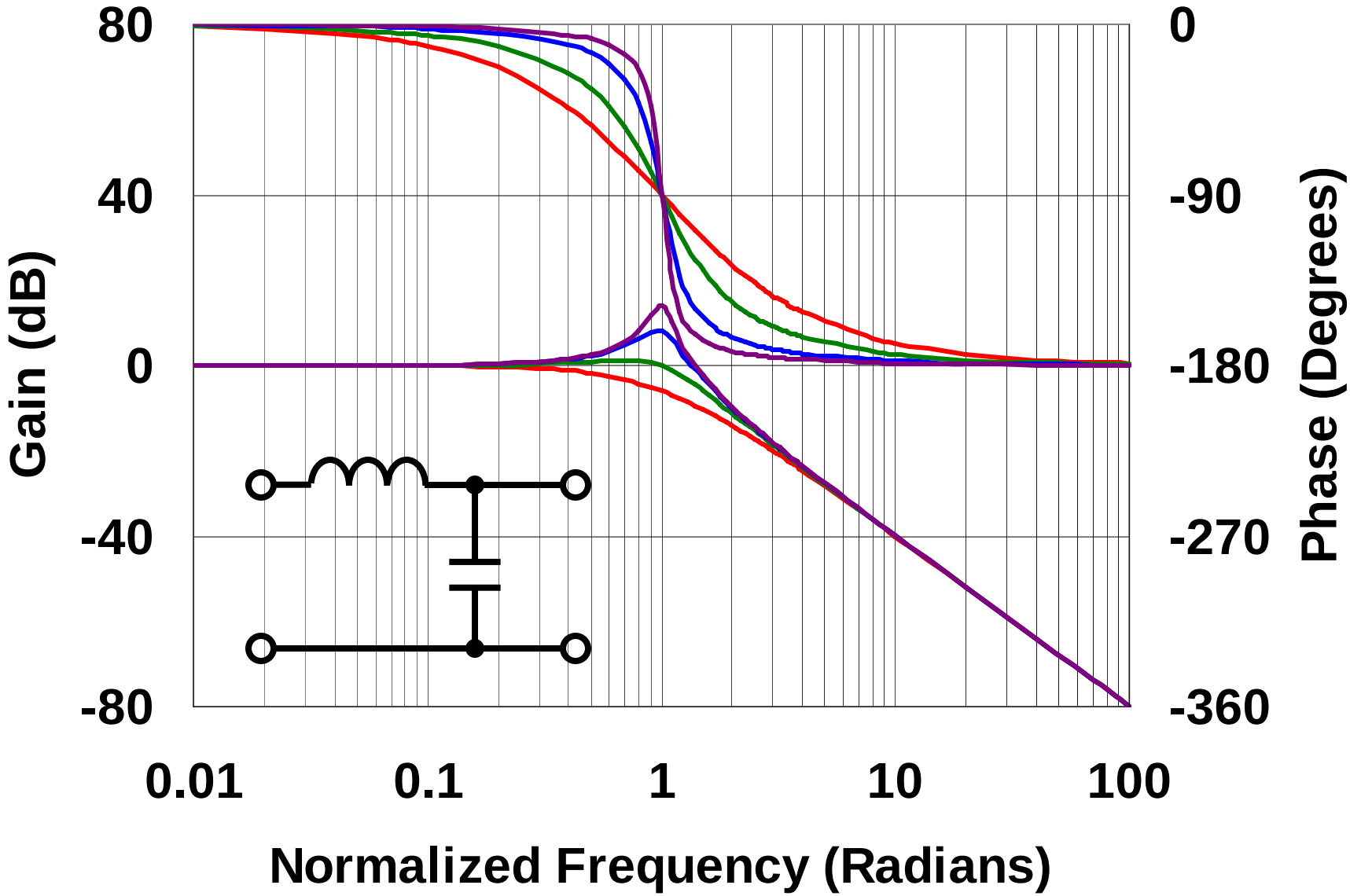

© 2007 Microchip Technology Incorporated. All Rights Reserved.

Error Amplifier Compensation Example

Buck - Continuous Inductor Current - Direct Duty Cycle Control

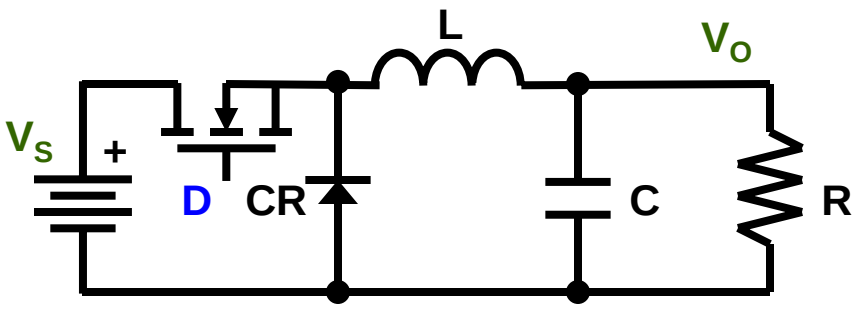

DC Analysis

$$D = \frac{V_C}{V_{RAMP}} \qquad V_O = V_S D = V_S \frac{V_C}{V_{RAMP}} \qquad V_C = \frac{V_O V_{RAMP}}{V_S}$$

Control to Output Transfer Function

$$\frac{v_O}{v_C} = \frac{V_S}{V_{RAMP}} H_e(s) \qquad H_e(s) = \frac{1 + s/\omega_Z}{1 + (s/\omega_O)/Q + (s/\omega_O)^2}$$

$$\omega_O = \frac{1}{\sqrt{LC}} \qquad \omega_Z = \frac{1}{R_{ESR} C} \qquad Q = \frac{R}{\omega_O L}$$

© 2007 Microchip Technology Incorporated. All Rights Reserved.

Error Amplifier Compensation Example

Buck - Continuous Inductor Current - Direct Duty Cycle Control

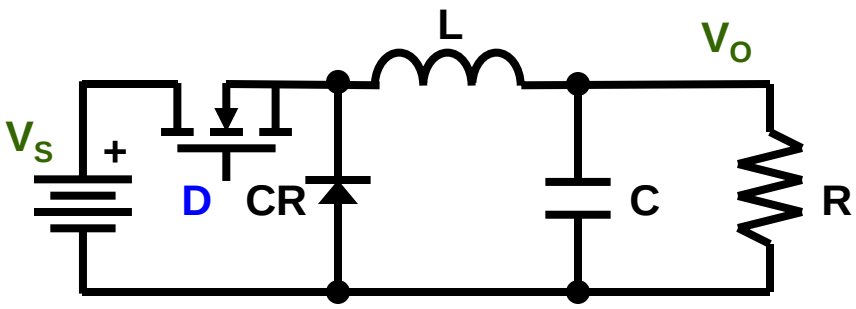

Calculate System Poles and Zeros

$$f_O = \frac{1}{2\pi\sqrt{LC}} \approx 10.6kHz$$

$$f_Z = \frac{1}{2\pi R_{ESR} C} \approx 106kHz$$

Calculate Low Frequency Gain

$$v_O / v_C = V_S / V_{RAMP} \quad = 8 \ (18dB) \ \text{at } 20V$$

$$= 4 \ (12dB) \ \text{at } 10V$$

Design Example

$$f_S = 500kHz \qquad T = 2\mu S$$

$$V_S = 10V \text{ to } 20V$$

$$V_O = 5V \qquad I_O = 1A \text{ to } 5A$$

$$R = 5\Omega \text{ to } 1\Omega$$

$$D = 0.5 \text{ to } 0.25$$

$$L = 15\mu H$$

$$C = 15\mu F$$

$$R_{ESR} = 100m\Omega$$

$$V_{RAMP} = 2.5V$$

© 2007 Microchip Technology Incorporated. All Rights Reserved.

Error Amplifier Compensation Example

Buck - Continuous Inductor Current - Direct Duty Cycle Control

Crossover Frequency Goal: $f_C = f_S/4 = 500kHz/4 = 125kHz$

E/A Gain Needed at Crossover:

$$-18 + 40\log(f_Z/f_O) + 20\log(f_C/f_Z) = 23.4dB$$

Two second order filter poles at f_o are compensated by two zeros at f_o /2. This provides additional phase shift at f_o for sudden second order transition.

$$f_Z = f_O/2 = 10.6kHz/2 = 5.3kHz$$

ESR zero is compensated by a pole at least a decade above the two zeros.

$$f_P = 53kHz$$

© 2007 Microchip Technology Incorporated. All Rights Reserved.

Error Amplifier Compensation Example

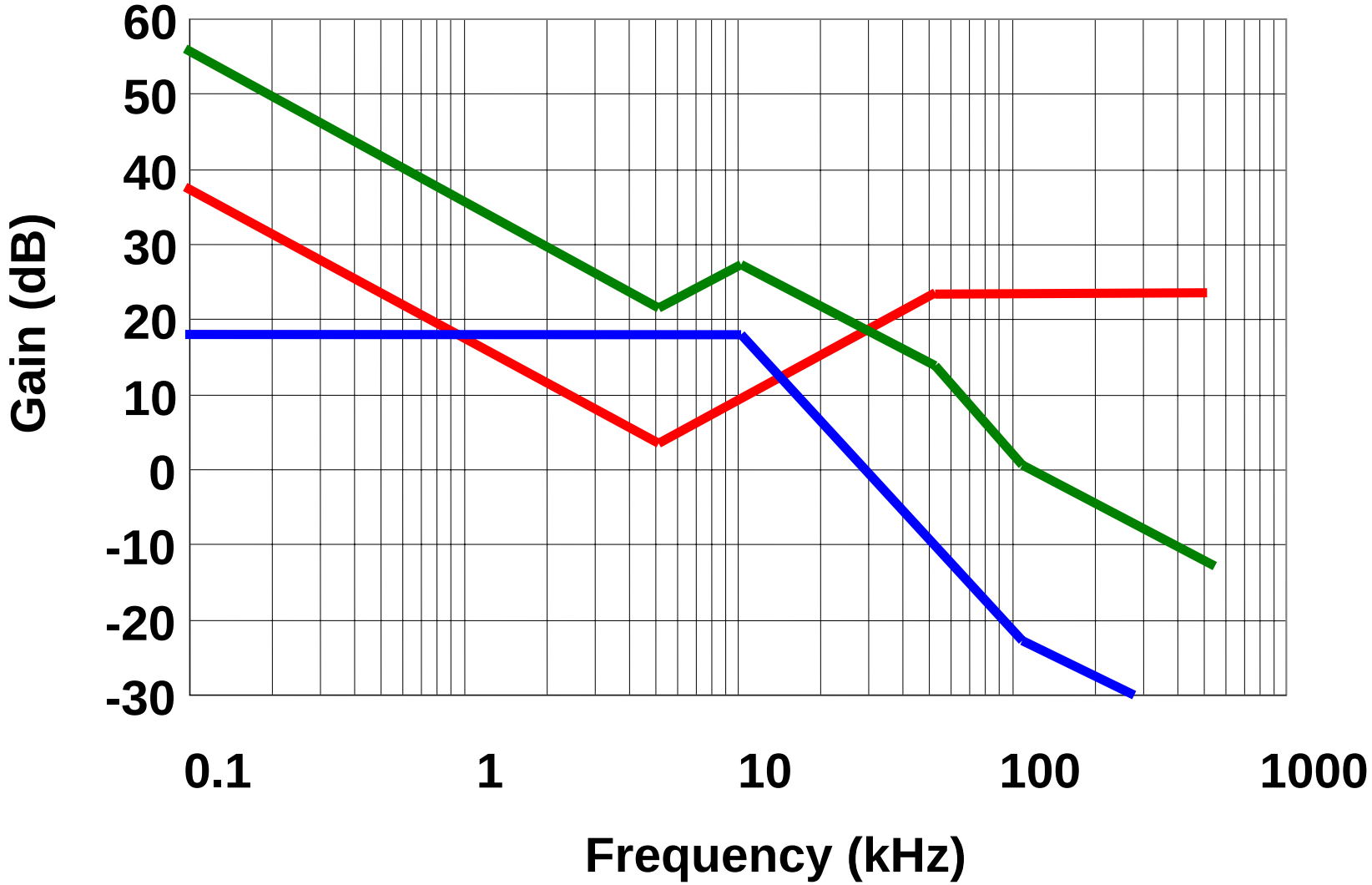

© 2007 Microchip Technology Incorporated. All Rights Reserved.

Error Amplifier Compensation Example

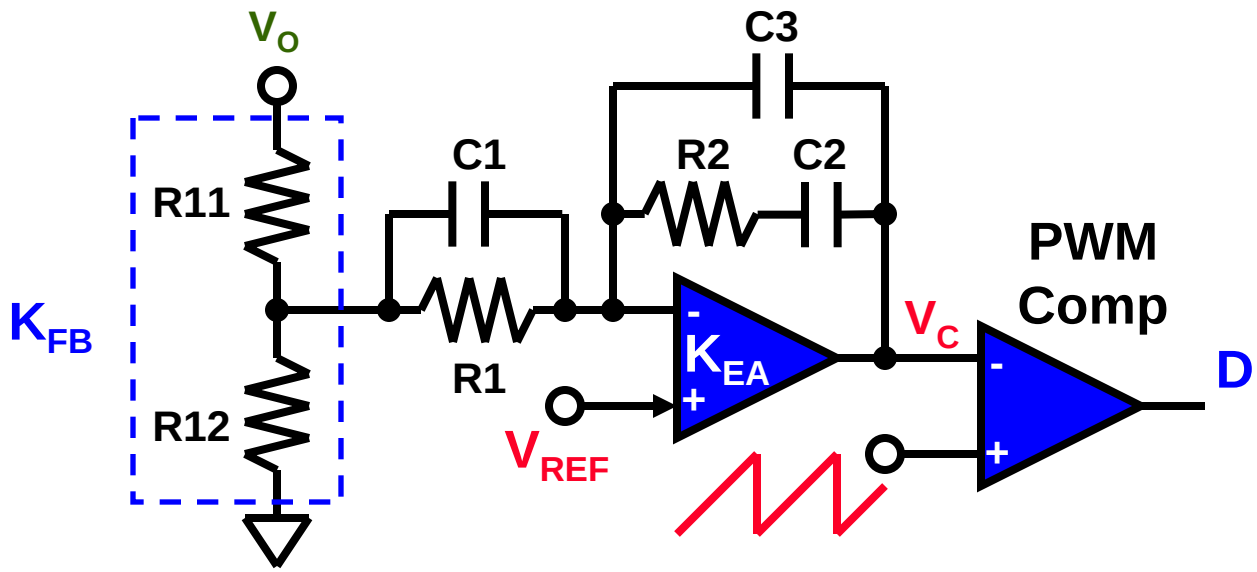

Pulse width modulator and Feedback gains

$K_{MOD} = d / v_C = 1 / V_{RAMP}$

$K_{MODX} = d / v_C = D / V_{RAMP}$

$= V_O / (V_S * V_{RAMP})$

$K_{FB} = V_O / V_{REF}$

$= R12 / (R11 + R12)$

Error amplifier

Three Poles and Two Zeros

$w_{Z1} = 1 / (C1 * R1)$

$w_{Z2} = 1 / (C2 * R2)$

$w_{P0} = 0$

$w_{P1} = 1 / (C1 * (R1 \| R11)$

$w_{P2} = 1 / (R2 * (C2 \| C3)$

© 2007 Microchip Technology Incorporated. All Rights Reserved.

Direct Duty Cycle Control Hands On

© 2007 Microchip Technology Incorporated. All Rights Reserved.

SMPC Control Methods

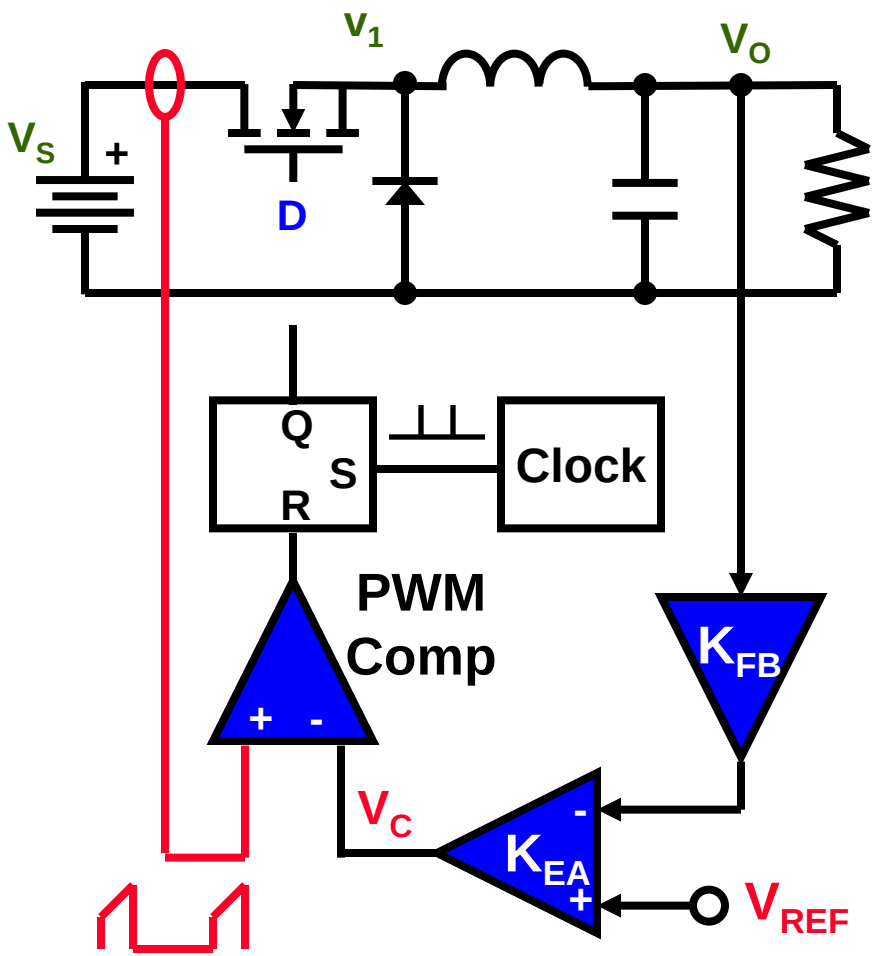

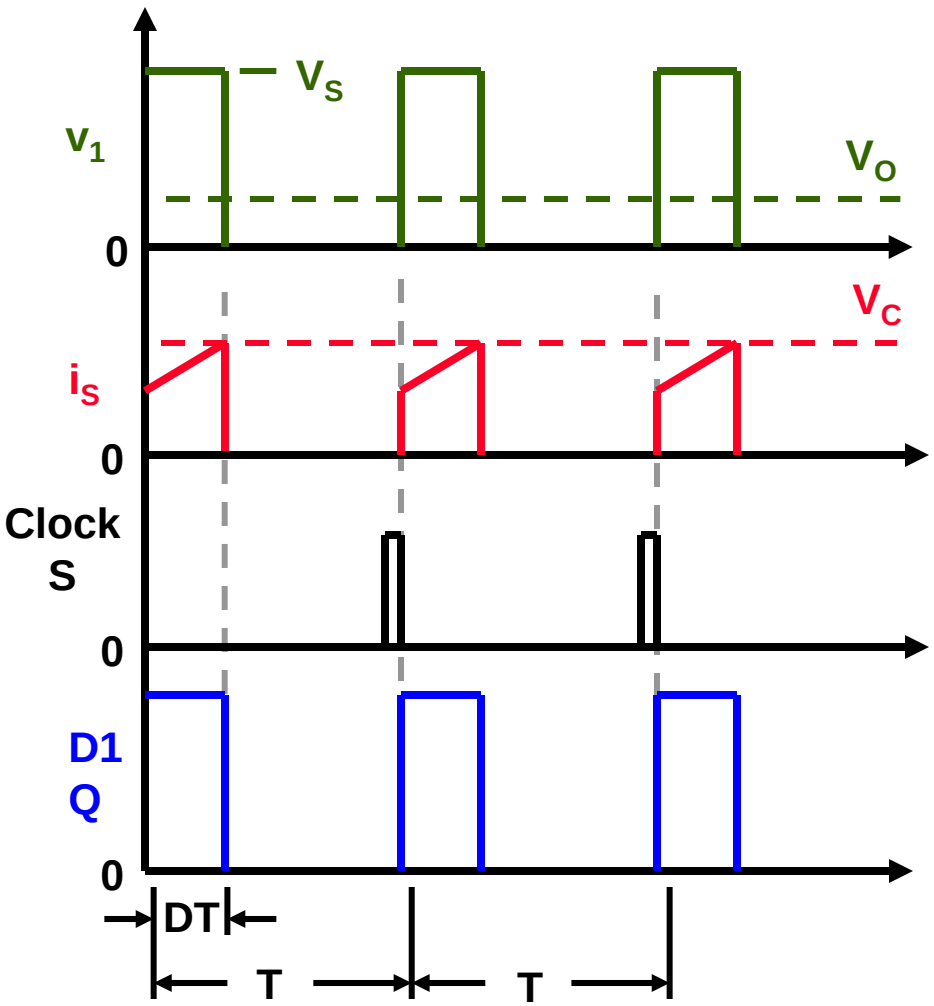

PEAK CURRENT MODE CONTROL

© 2007 Microchip Technology Incorporated. All Rights Reserved.

Current Sensing Techniques

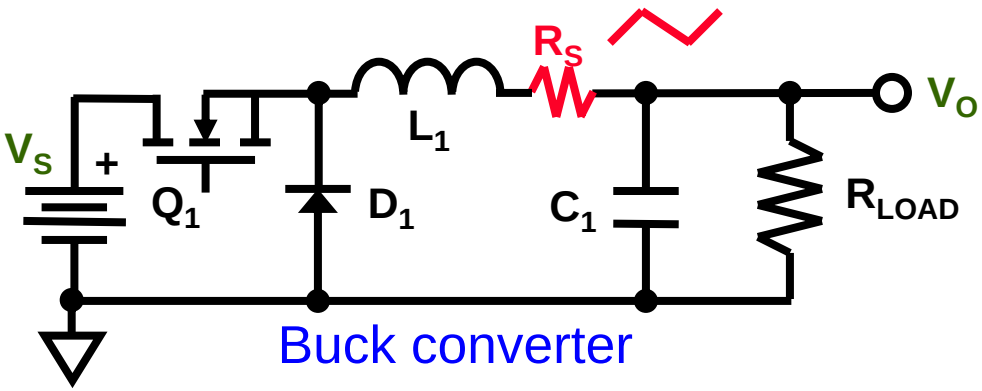

- Clean waveform, dissipative, floating sensor circuit

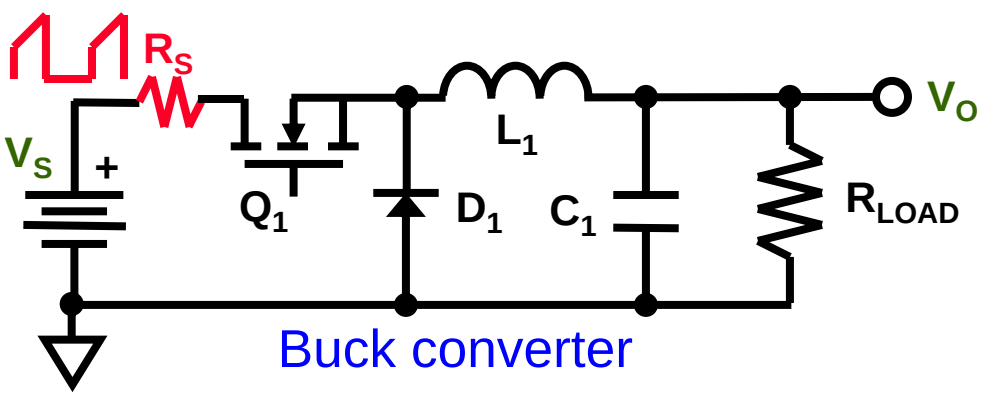

- Leading-edge spike, less dissipative, V_S referenced sensor circuit

© 2007 Microchip Technology Incorporated. All Rights Reserved.

Current Sensing Techniques

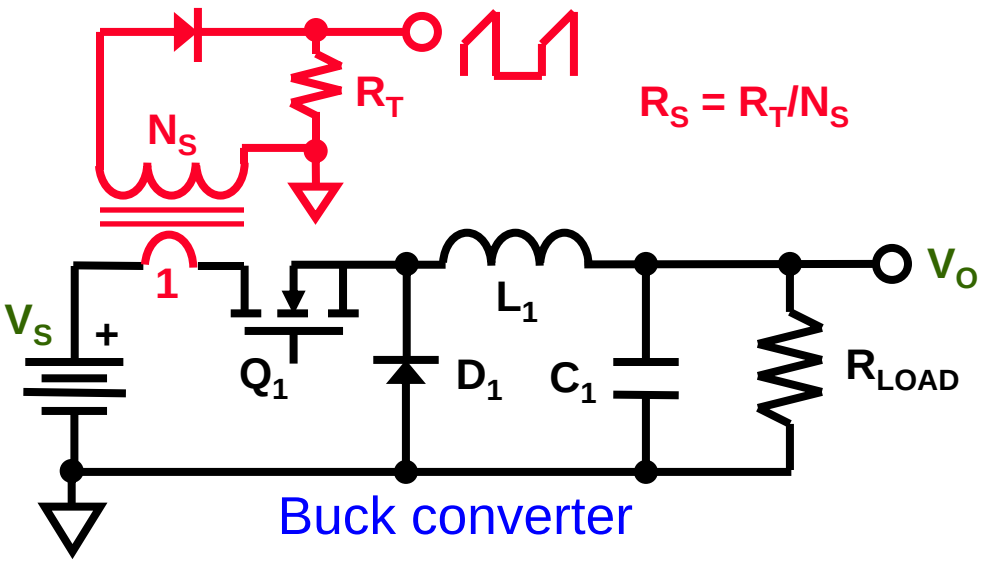

- Leading-edge spike, negligible dissipation, can be isolated, expensive

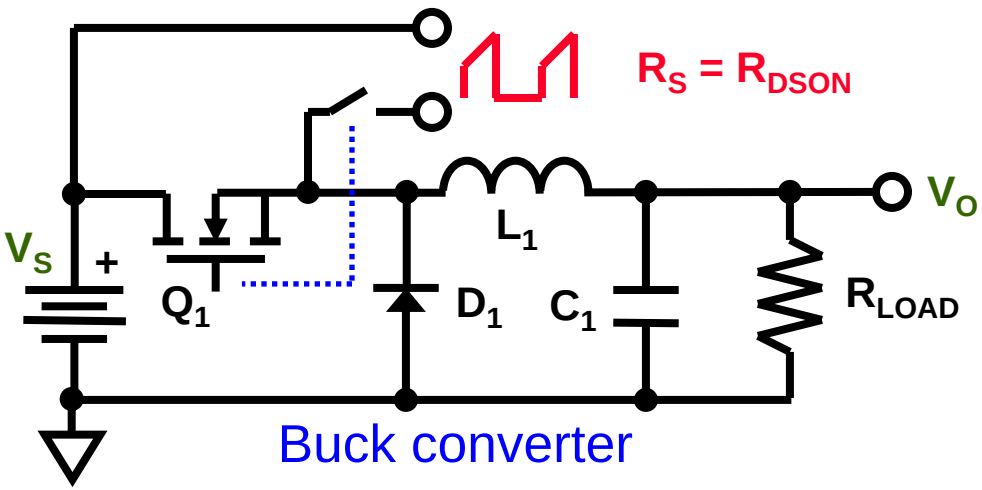

- No additional dissipation, complex, inaccurate (initial tolerance, temperature/ current dependence)

© 2007 Microchip Technology Incorporated. All Rights Reserved.

Leading-Edge Spike: Origin

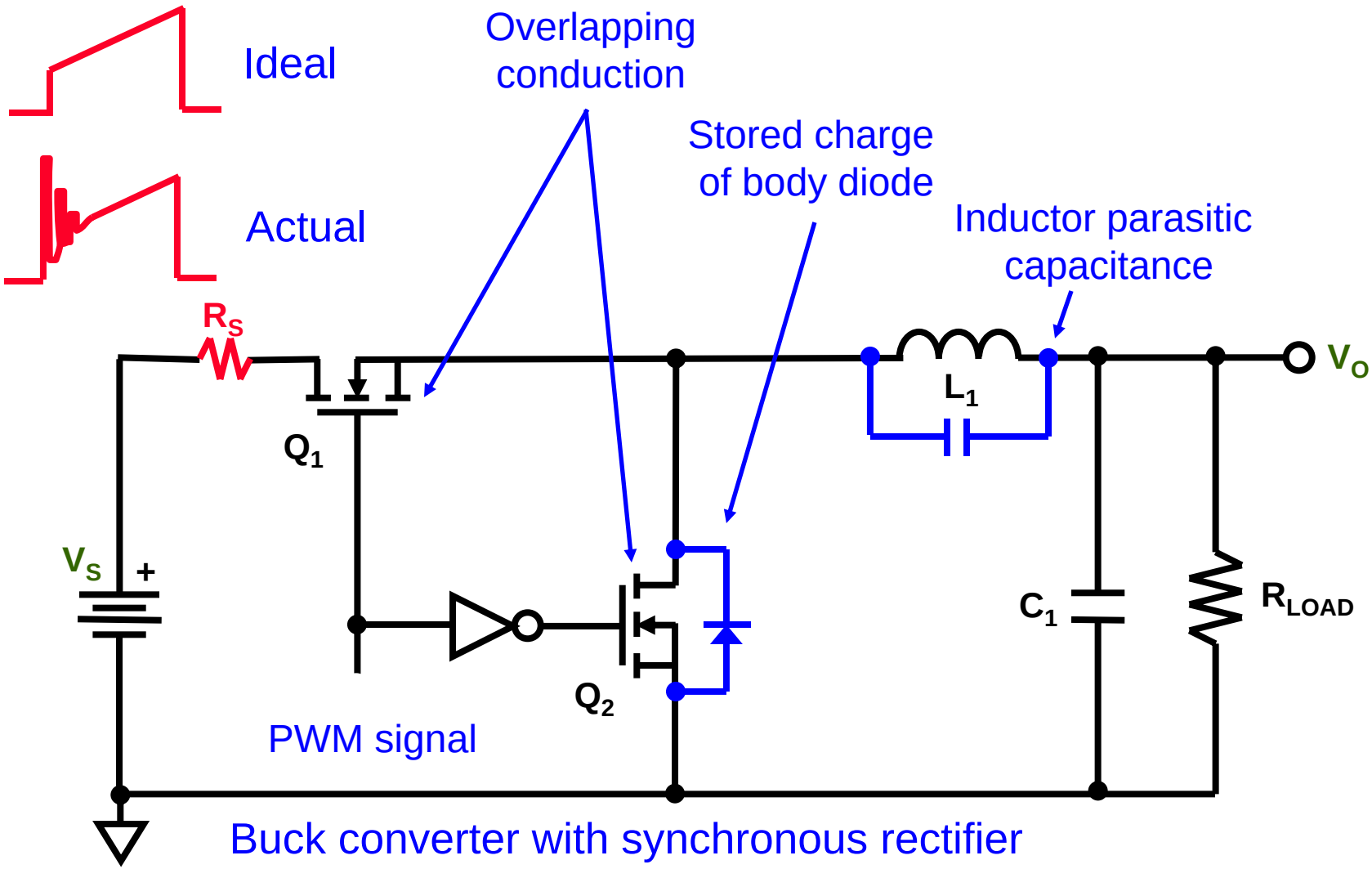

© 2007 Microchip Technology Incorporated. All Rights Reserved.

Leading-Edge Spike: Solutions

- Eliminate overlapping conduction
- Filter current sense signal

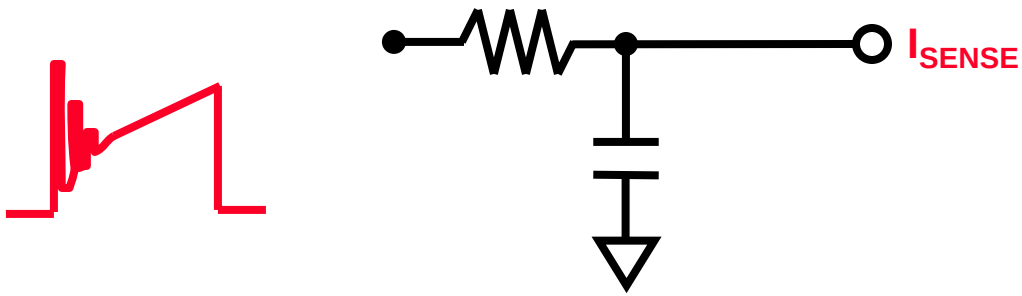

- Implement leading-edge blanking

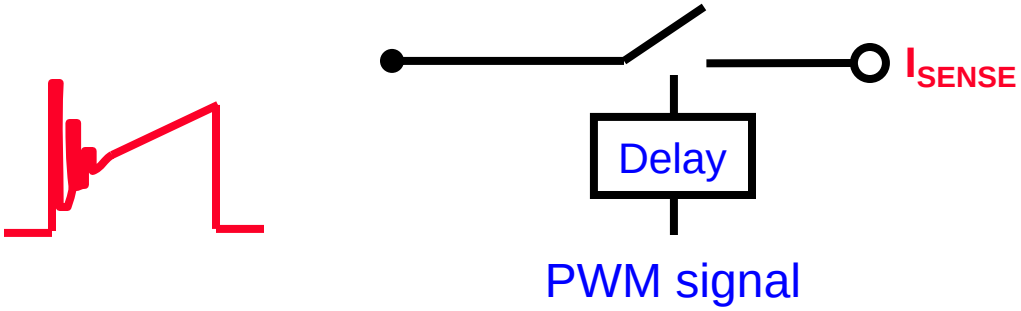

© 2007 Microchip Technology Incorporated. All Rights Reserved.

SMPC Control Methods

- Advantages
  - Good line response and gain constant
  - Single pole
  - Inherent pulse-by-pulse current limiting
  - Load sharing
- Disadvantages
  - Two feedback loops
  - Unstable above 50% duty cycle without slope compensation
  - Poor noise immunity
  - Load regulation worse
  - No direct relationship between the duty ratio and the control signal

© 2007 Microchip Technology Incorporated. All Rights Reserved.

Waveforms of Subharmonic Instability

– **Stable operation**

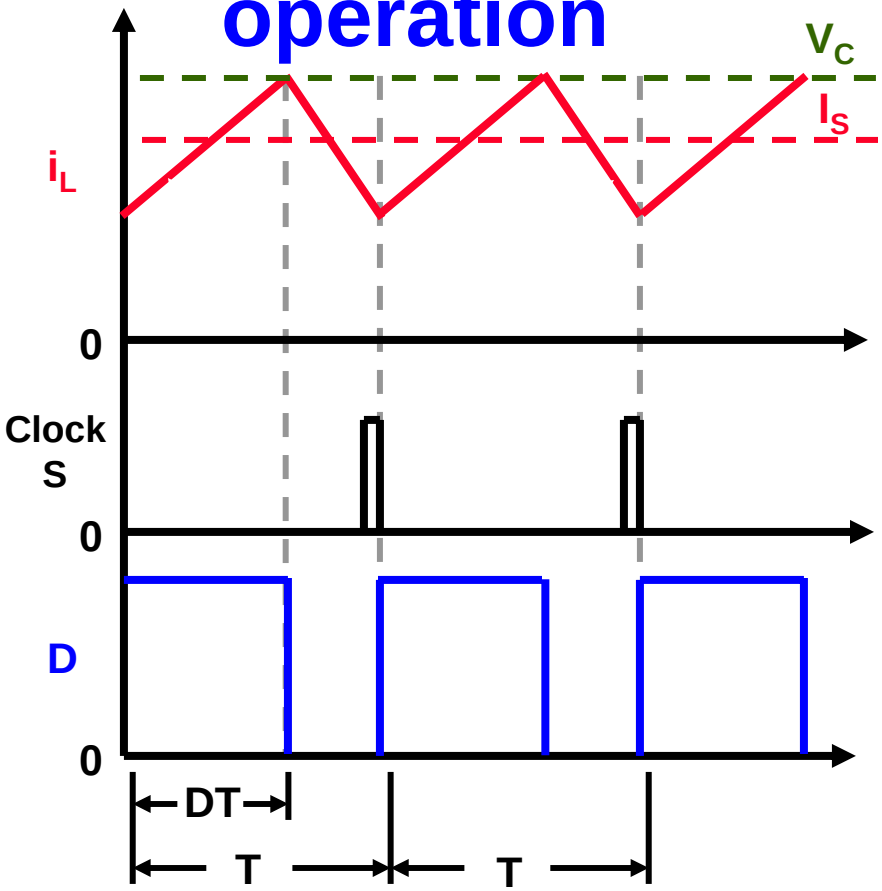

– **Subharmonic instability**

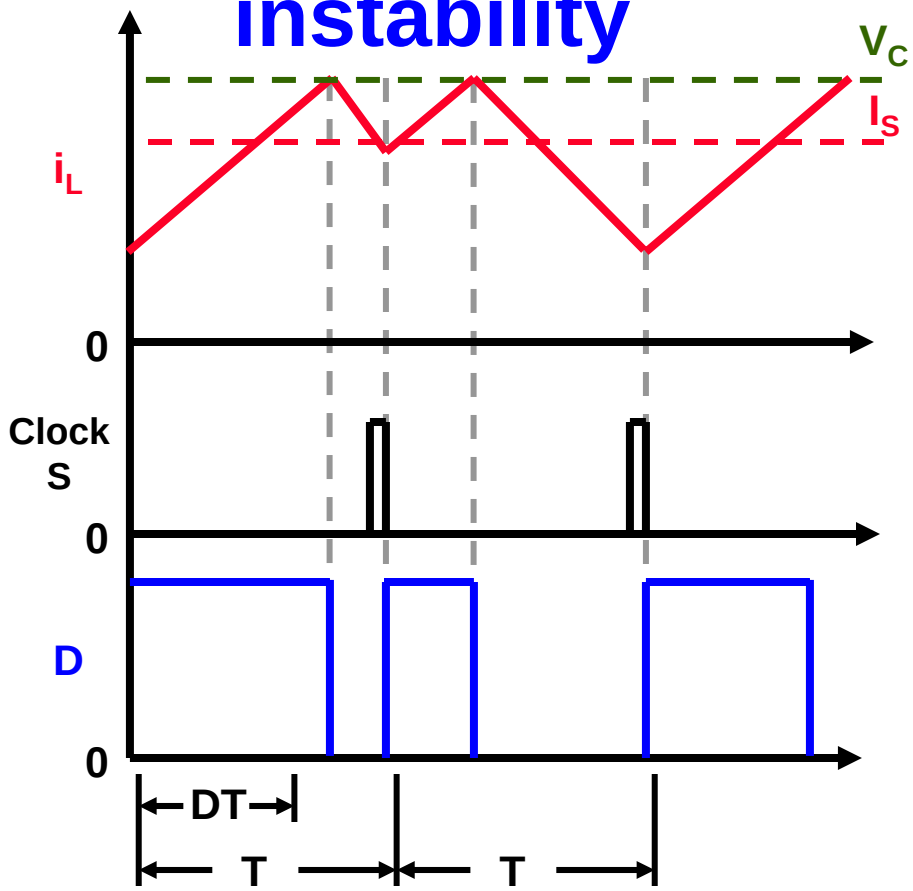

© 2007 Microchip Technology Incorporated. All Rights Reserved.

Adding Stabilizing Ramp

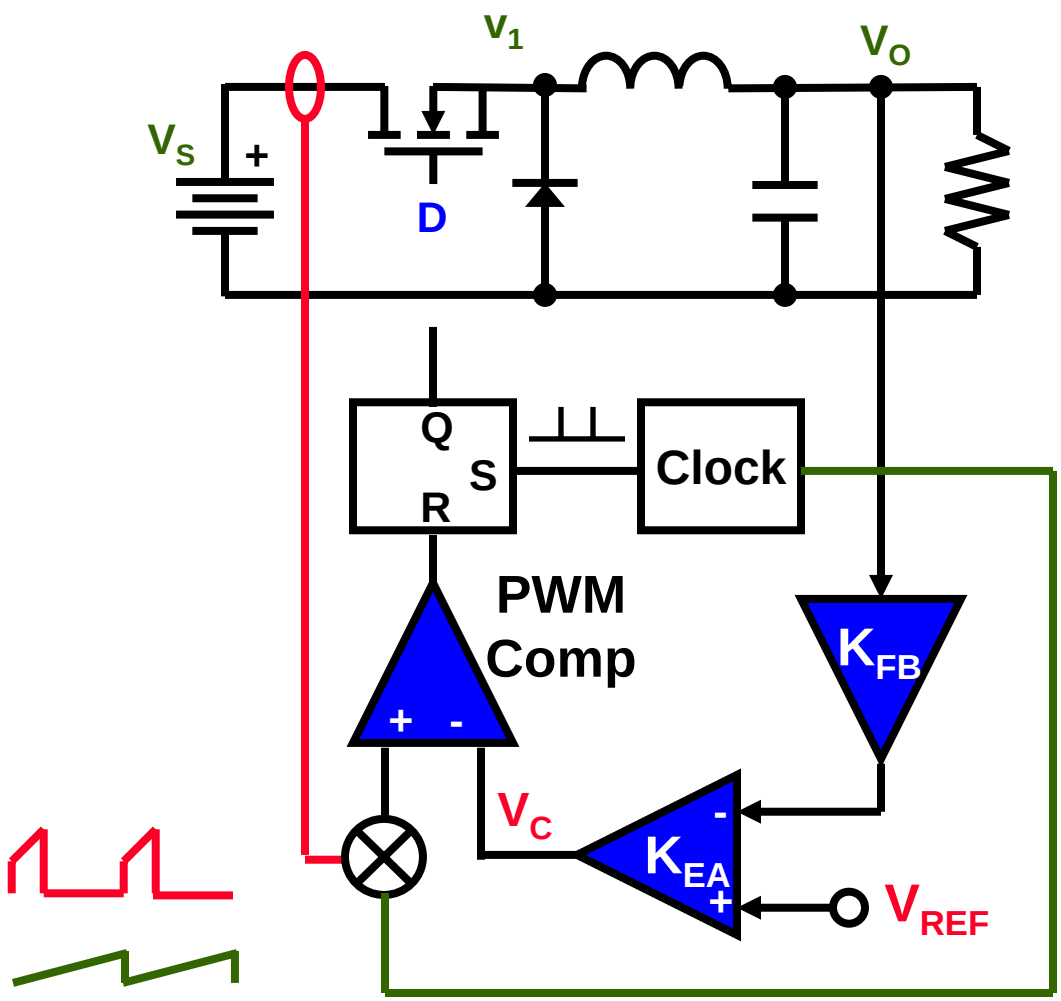

© 2007 Microchip Technology Incorporated. All Rights Reserved.

How much ramp should be added?

- Stability conditions without stabilizing ramp
  - $m_2 / m_1 < 1$ i.e., D<0.5
- Stability conditions with stabilizing ramp
  - buck, boost $V_{ST} / R_S * T > V_O / 2 * L$
- Perturbations disappear within a single period if
  - $V_{ST} / R_S * T = m_2$
- In buck converter, perfect rejection of input-voltage variation if
  - $V_{ST} / R_S * T = m_2 / 2$

© 2007 Microchip Technology Incorporated. All Rights Reserved.

Stability Summary

- In theory, stabilizing ramp is not required below 50% duty ratio. In practice, above about 40%, it is necessary to add some ramp in order to prevent instabilities caused by parasitics, noise, and/or the amplified feedback ripple.
- Without ramp, peaking appears in the control-to-output voltage function at one-half of the switching frequency.
- A large ramp converts the controller to voltage mode type. Peaking might appear at the LC filter resonance. Also, the benefit of current-limit capability is reduced or eliminated.

© 2007 Microchip Technology Incorporated. All Rights Reserved.

Peak Current Mode Error Amplifier Compensation Example

- **Two feedback loops:**
  - Inner current loop
  - Outer voltage loop
- **System's total loop gain is sum of the individual open loop gains**

$$G(s)H(s) = G_1(s)H_1(s) + G_2(s)H_2(s)$$

- **Single Loop Open Loop Gain**

$$G(s)H(s) = \frac{G_2(s)H2(s)}{\left[1 + G1(s)H_1(s)\right]}$$

© 2007 Microchip Technology Incorporated. All Rights Reserved.

Peak Current Mode Error Amplifier Compensation Example

- **Inner current loop:**

$$G_1(s)H_1(s) = \frac{\gamma 2Lf_S}{(1-D)} \frac{\left(s + \frac{1}{RC}\right)}{\left(s^2 + \frac{s}{RC} + \frac{1}{LC}\right)} \qquad \gamma = \frac{m_1}{m_2 + 2m_3}$$

- **Outer voltage loop:**

$$G_2(s)H_2(s) = \frac{\gamma 2 f_S}{(1-D)} \frac{\frac{1}{R_S C}}{\left(s^2 + \frac{s}{RC} + \frac{1}{LC}\right)}$$

© 2007 Microchip Technology Incorporated. All Rights Reserved.

Peak Current Mode Error Amplifier Compensation Example

Buck - Continuous Inductor Current – Peak Current Mode Control

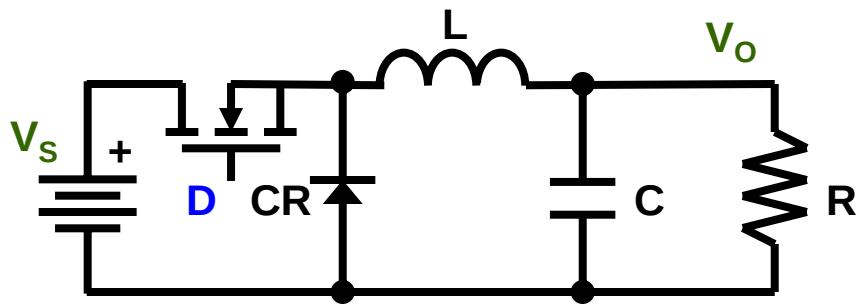

Control to Output Transfer Function

$$\frac{v_o}{v_c} = \frac{\left(\frac{\gamma 2 f_S}{1-D}\right)\left(\frac{1}{R_S C}\right)}{\left(s + \frac{\gamma 2 f_S}{1-D}\right)\left(s + \frac{1}{RC}\right)}$$

Low Frequency Pole $f_{p1} = \frac{1}{2\pi RC}$

High Frequency Pole $f_{p2} = \frac{2\gamma f_s}{2\pi(1-D)}$

© 2007 Microchip Technology Incorporated. All Rights Reserved.

Peak Current Mode Error Amplifier Compensation Example

Buck - Continuous Inductor Current - Peak Current Mode Control

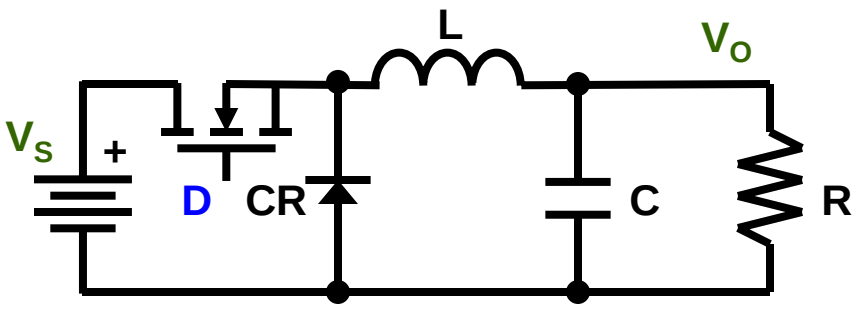

Calculate System Poles (10V, 5Ω)

$$f_{p1} = \frac{1}{2\pi RC} \approx 2.1kHz$$

$$f_{p2} = \frac{2\gamma f_s}{2\pi(1-D)} \approx 159\,kHz$$

Calculate Low Frequency Gain

$$v_O / v_C = R/R_S \qquad = 1\ (0dB)\ \text{at}\ 1\Omega$$

$$= 5\,(14dB)\ \text{at}\ 5\Omega$$

Design Example

$$f_S = 500kHz \qquad T = 2\mu S$$

$$V_S = 10V \text{ to } 20V$$

$$V_O = 5V \qquad I_O = 1A \text{ to } 5A$$

$$R = 5\Omega \text{ to } 1\Omega$$

$$R_S = 1\Omega$$

$$D = 0.5 \text{ to } 0.25$$

$$L = 15\mu H$$

$$C = 15\mu F$$

$$R_{ESR} = 100m\Omega$$

$$\gamma = 0.5$$

© 2007 Microchip Technology Incorporated. All Rights Reserved.

Peak Current Mode Error Amplifier Compensation Example

Buck - Continuous Inductor Current – Peak Current Control

Crossover Frequency Goal:

$$f_C = f_S/4 = 500kHz/4 = 125kHz$$

E/A Gain Needed at Crossover:

$$-14dB + 20\log(f_{P1}/fc) = 21.5dB$$

Single filter pole at f_{P1} is compensated with single zero.

$$f_Z = 2.1kHz$$

ESR zero is compensated by a high frequency pole f_{P2}.

$$f_{P2} = 159kHz$$

© 2007 Microchip Technology Incorporated. All Rights Reserved.

Peak Current Mode Error Amplifier Compensation Example

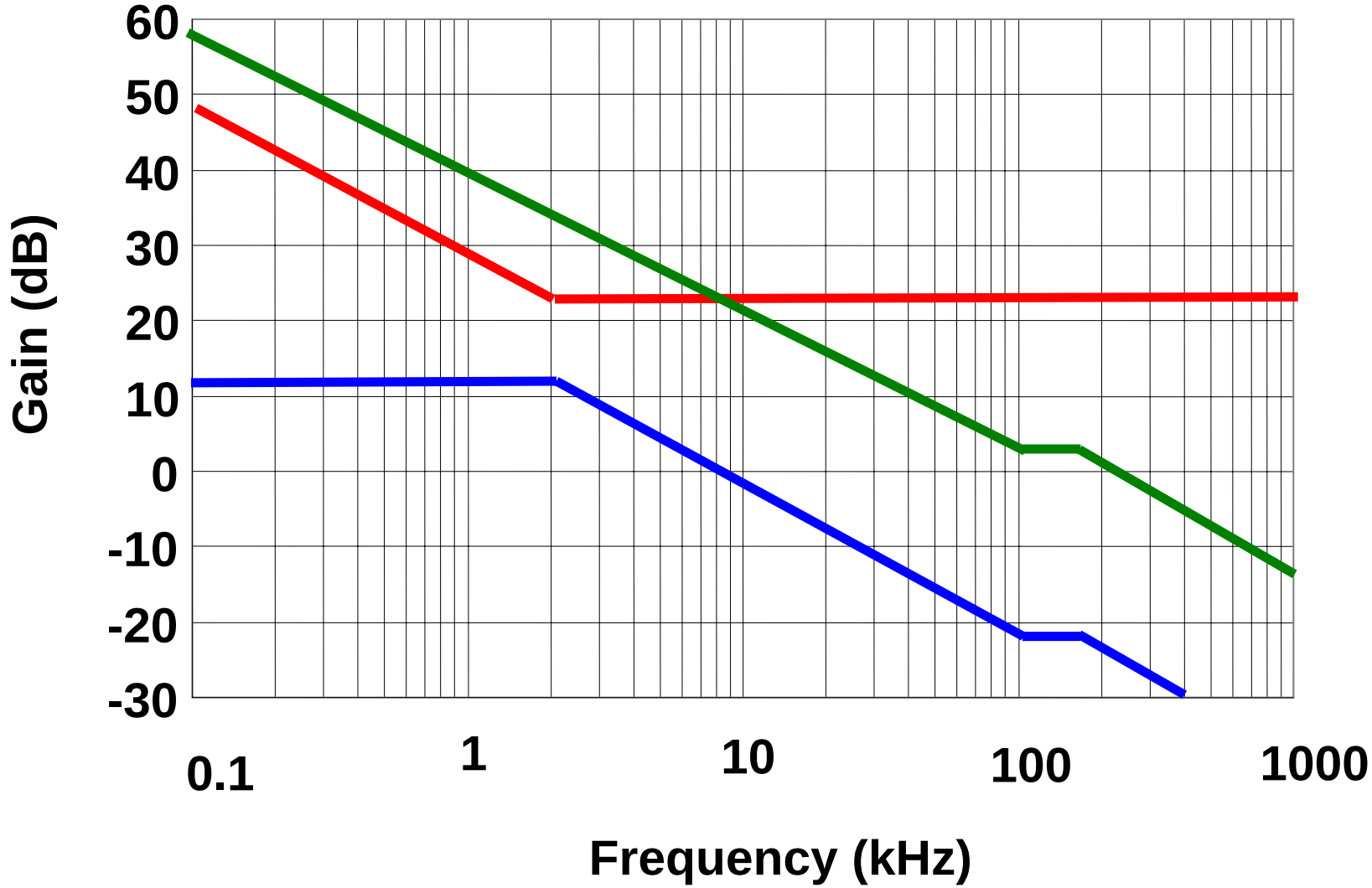

© 2007 Microchip Technology Incorporated. All Rights Reserved.

Peak Current Mode Error Amplifier Compensation Example

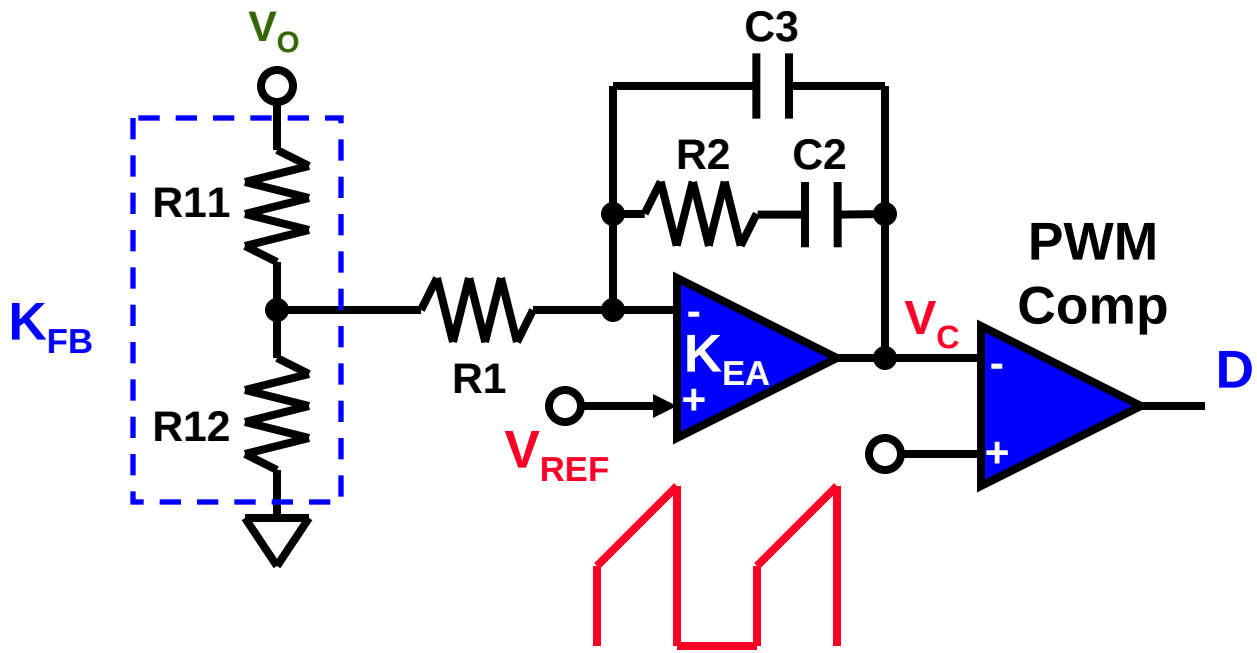

Pulse width modulator and Feedback gains

$K_{MOD} = d / v_C = R / R_S$

$K_{FB} = V_O / V_{REF}$
$= R12 / (R11 + R12)$

Error amplifier
One Zero and Two Poles

$w_{Z1} = 1 / (C2 * R2)$
$w_{P1} = 0$
$w_{P2} = 1 / (R2 * (C2 || C3)$

© 2007 Microchip Technology Incorporated. All Rights Reserved.

Peak Current Mode Control Hands On

© 2007 Microchip Technology Incorporated. All Rights Reserved.

Digital Loop Closure

© 2007 Microchip Technology Incorporated. All Rights Reserved.

Digital Power

- **Digital Control**

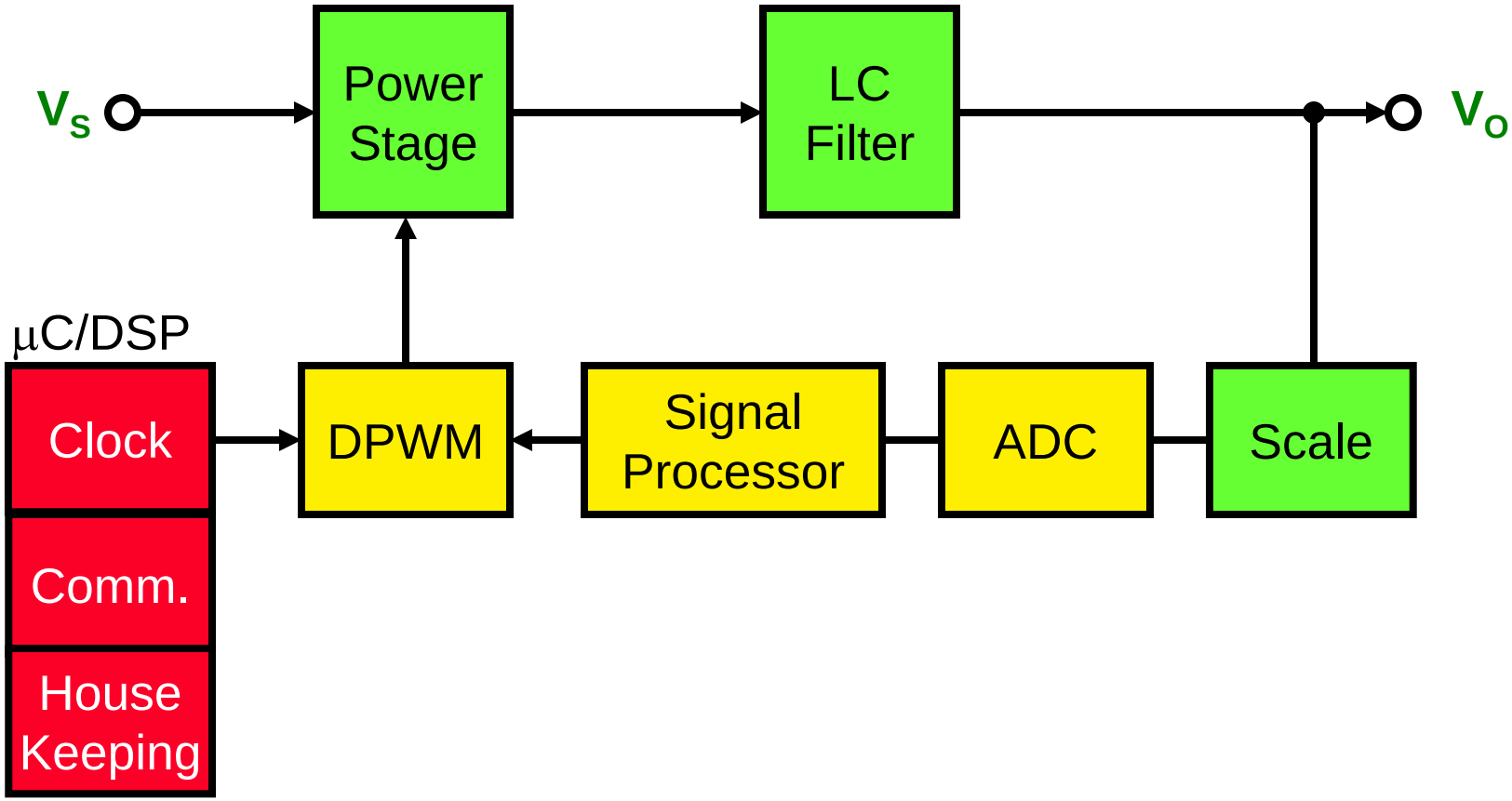

© 2007 Microchip Technology Incorporated. All Rights Reserved.

Digital Control

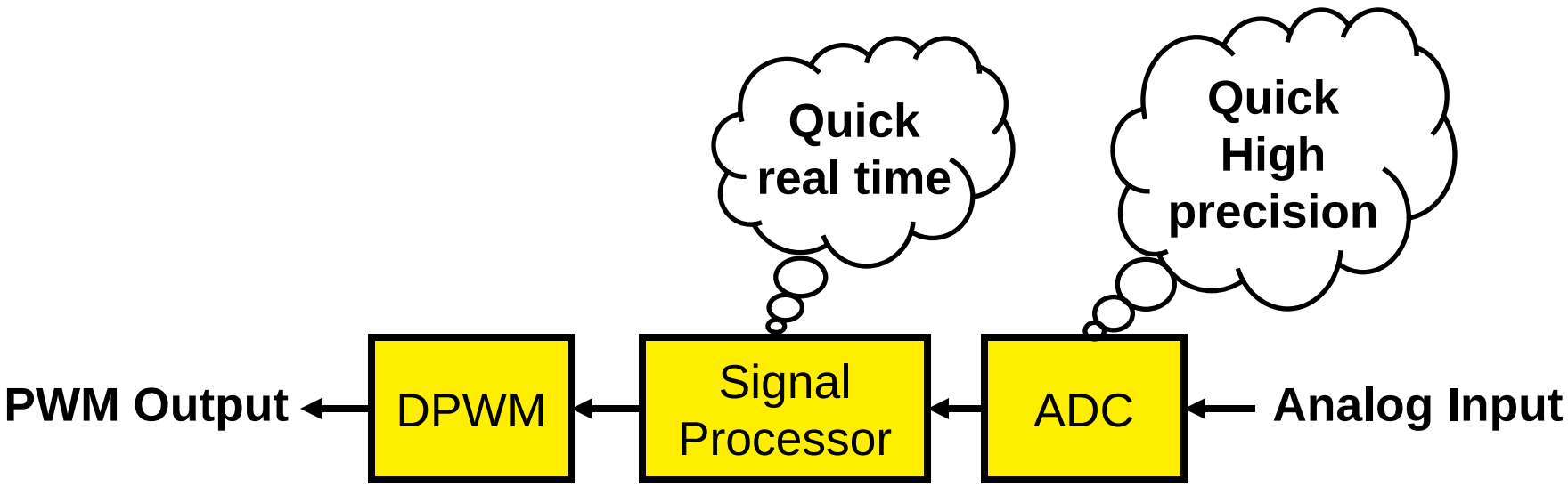

© 2007 Microchip Technology Incorporated. All Rights Reserved.

Digital Control

- **Digital Pulse Width Modulator**
  - Performs same drive signal generation as its analog counterpart
  - Does so by “calculating” and then “timing” the desired ON and OFF periods
    - **Finite resolution leads to quantization effects**

© 2007 Microchip Technology Incorporated. All Rights Reserved.

Digital Control

- **Analog-to-Digital Converter**
  - Produces digital data that represents output voltage and / or current
  - Resolution and ADC reference voltage set the precision to which the output can be maintained
    - **Finite resolution leads to quantization effects**

© 2007 Microchip Technology Incorporated. All Rights Reserved.

Digital Control

- **Quantization Effects - A digital phenomenon**
  - Analog control provides “infinite” resolution
    - **Limited by loop gain, thermal effects, and system noise**
  - Digital control provides a finite set of discrete “set points” resulting from the resolution of the “quantizing elements” in the system
    - **Two elements in this represented example: ADC and DPWM**

© 2007 Microchip Technology Incorporated. All Rights Reserved.

Digital Control

- **Quantization Effects - ADC**
  - Resolution is defined as the number of states that can be uniquely represented
    - **n bit resolution can assume 2^n states**
  - ADC resolution ensures that the set point tolerance can be met

Example: **V_O = 3.3V +/- 1%** **Required resolution = ΔV_O = 1%**

ADC bits required = n = int [$\log_2(V_O / \Delta V_O)$]
= int [$\log_2(100)$] = 7

© 2007 Microchip Technology Incorporated. All Rights Reserved.

Digital Control

- **Quantization Effects - ADC**

Low ADC Resolution and Speed

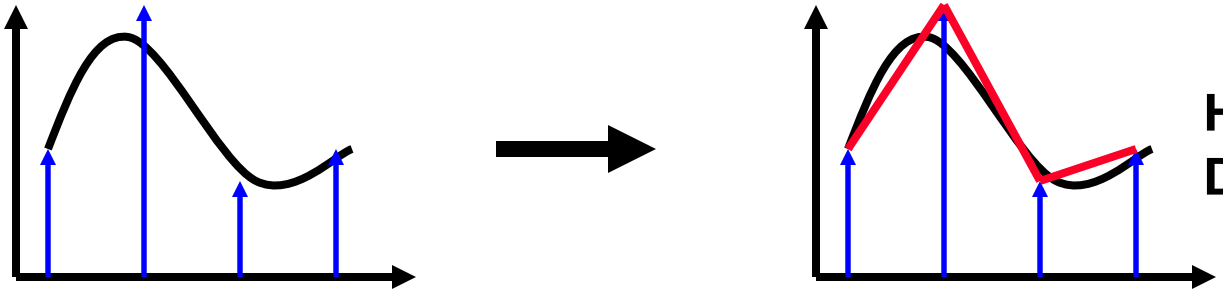

High Signal Distortion

Signal Reconstruction

High ADC Resolution and Speed

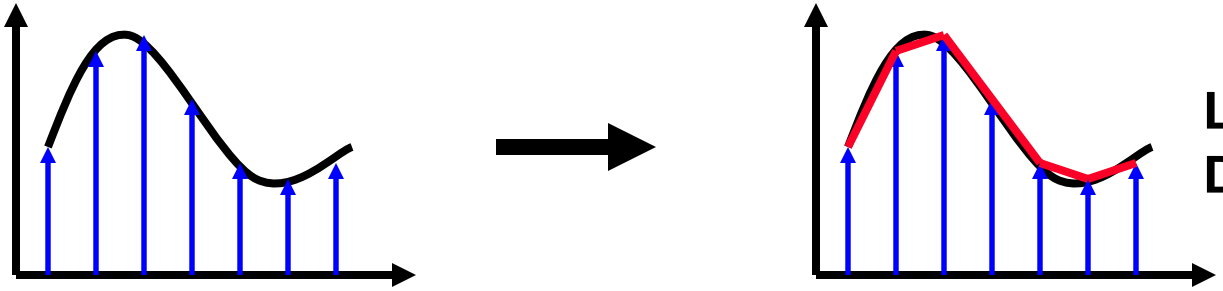

Low Signal Distortion

© 2007 Microchip Technology Incorporated. All Rights Reserved.

Digital Control

- **Quantization Effects - DPWM**
  - Minimum required number of DPWM states equals 2^{n+1}
    - **If less, the system will appear to hunt for a stable output value**
  - System clock sets the maximum number of bits that can be generated in a fixed time period

Example1: **ADC Resolution = 7 Required DPWM resolution = 8**
Desired switching frequency = 1MHz
Required system clock = 1MHz * 2^8 = 256MHz !!

Maximum switching speed
with: dsPIC30F201X = 30MHz / 2^7 = 234kHz

© 2007 Microchip Technology Incorporated. All Rights Reserved.

Digital Control

- **"Control" Law Processor**
  - Typically a PI or PID (Proportional Integral Derivative) style
    - **Controls dc level and dynamic response characteristics of the control loop**
    - **Represented as mathematical coefficients; manipulated to adjust system performance**
  - Translates digital representation of output voltage into pulse duration (duty cycle) information used by the DPWM
  - Does not affect the resolution of the system

© 2007 Microchip Technology Incorporated. All Rights Reserved.

Digital Control

- **Advantages**
  - "Tunable" system on-the-fly
  - Independent of thermal drift, aging, and component tolerance limitations
  - Precise control loop related parameters
- **Disadvantages**
  - Quantization errors
  - Limited system switching frequency

© 2007 Microchip Technology Incorporated. All Rights Reserved.

Digital Control

- **Control Loop Design Procedure**
  1. Compensate the converter in the analog domain
  2. Convert the analog compensation to a difference equation

© 2007 Microchip Technology Incorporated. All Rights Reserved.

Analog Compensation Conversion

Simple Integrator

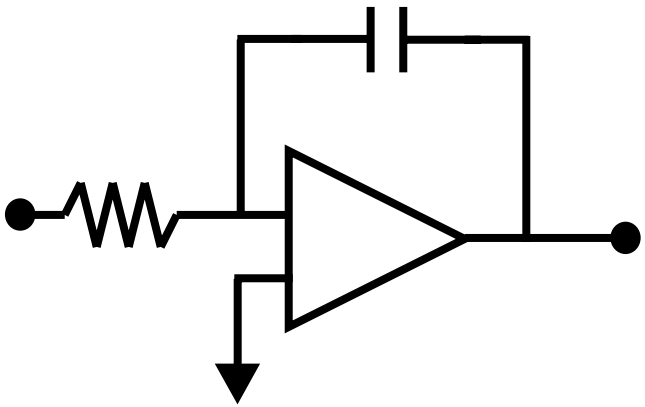

Transfer Function = 1/s

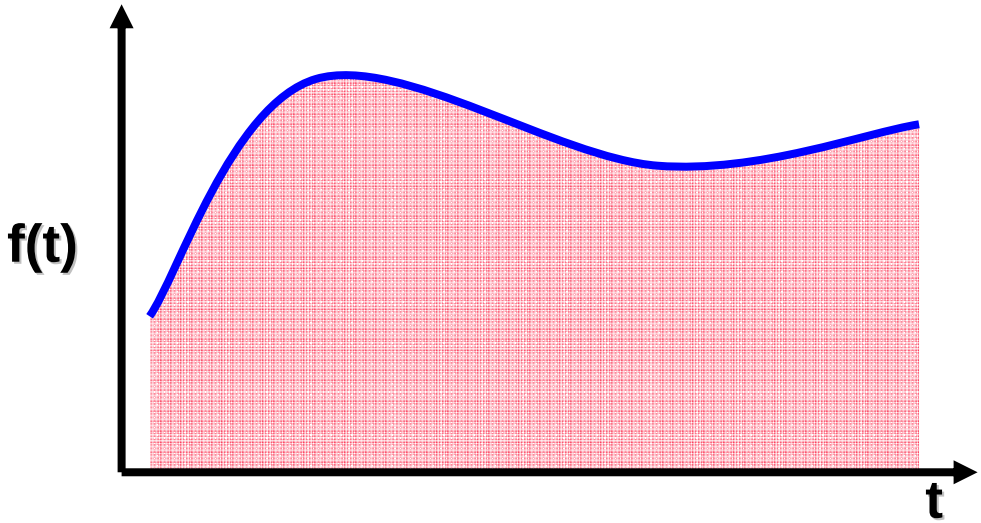

© 2007 Microchip Technology Incorporated. All Rights Reserved.

Backward Euler Method

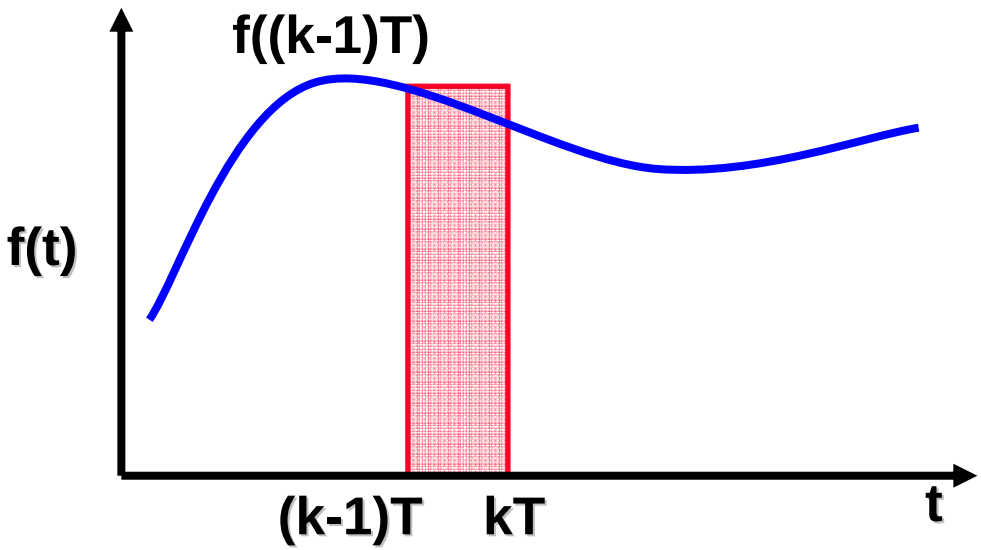

Given:

- **integral of f(t) at kT is u(kT)**
- **G(z)=U(z)/F(z)**

$$u(kT) = u((k-1)T) + Tf((k-1)T)$$

$$U(z) = z^{-1}U(z) + z^{-1}TF(z)$$

$$\frac{U(z)}{F(z)} = \frac{T}{z-1}$$

$$\frac{1}{s} = \frac{T}{z-1}$$

© 2007 Microchip Technology Incorporated. All Rights Reserved.

Forward Euler Method

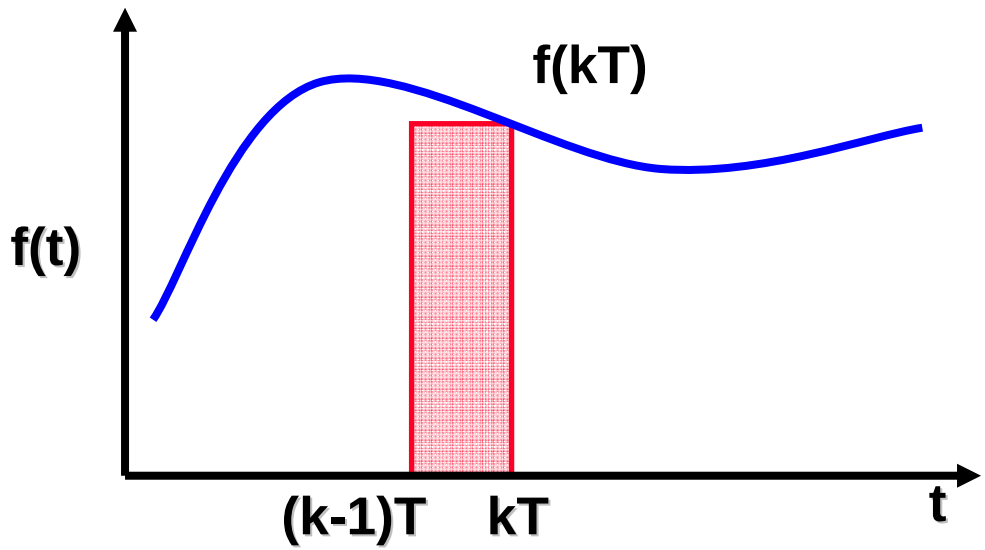

$$u(kT) = u((k-1)T) + Tf(kT)$$

$$G(z) = T\frac{z}{z-1} \qquad \frac{1}{s} = T\frac{z}{z-1}$$

© 2007 Microchip Technology Incorporated. All Rights Reserved.

Trapezoidal Method

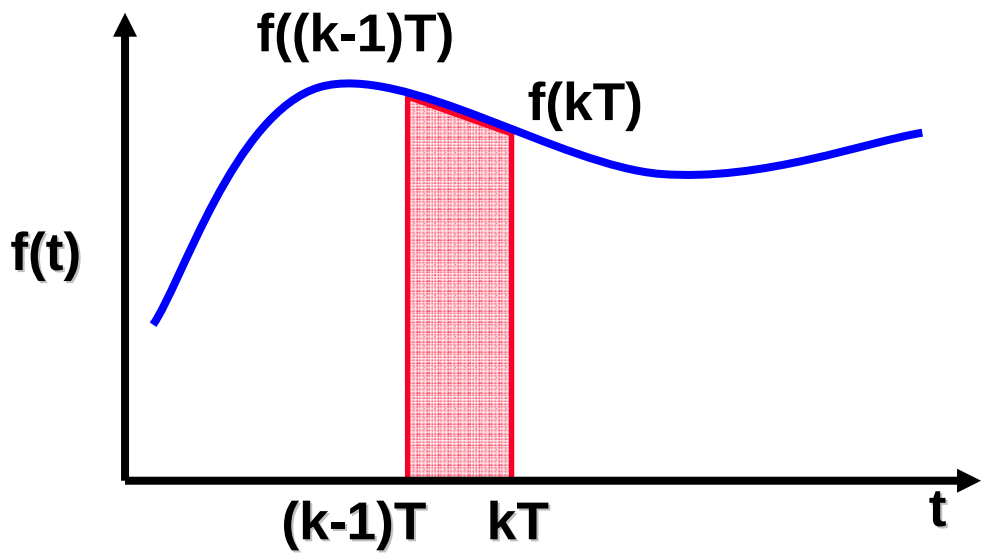

$$u(kT) = u((k-1)T) + \frac{T}{2}\{f(kT) - f((k-1)T)\}$$

$$G(z) = \frac{T}{2}\frac{z+1}{z-1} \qquad \frac{1}{s} = \frac{T}{2}\frac{z+1}{z-1}$$

© 2007 Microchip Technology Incorporated. All Rights Reserved.

Generating the Difference Equation Example

s-domain Transfer Function: $$G(s) = \frac{6}{3s+1}$$

Using Backward Euler: $$G(z) = \frac{6}{3\left(\frac{z-1}{T}\right)+1}$$

Given: $$G(z) = \frac{OUT(z)}{IN(z)}$$

Setting T=0.1sec yields: $$OUT(z)(3z-2.9) = 0.6IN(z)$$

Converting to Difference Eq: $$OUT_{K+1} = 0.966OUT_K + 0.2IN_K$$

© 2007 Microchip Technology Incorporated. All Rights Reserved.

Digital Control Hands On

© 2007 Microchip Technology Incorporated. All Rights Reserved.

Summary

- The power management industry is evolving and digital power is a key element of this evolution
- Microchip is well-positioned with products like the PIC16F785, MCP1630, and dsPIC® DSC to be a major contributor to this evolution

© 2007 Microchip Technology Incorporated. All Rights Reserved.

References

- MCP1630V Datasheet, DS21896
- PIC16F690 Datasheet, DS41262
- dsPIC30F2010 Datasheet, DS70118
- Numerous Microchip Application Notes
- L.H.Dixon, "Average current-mode control of switching power supplies," *Unitrode Power Supply Design Seminar Handbook*, 1991
- L.H.Dixon, "Control loop cookbook," *Unitrode Power Supply Design Seminar Handbook*, 1990
- R.P.Severns, G.Bloom, *Modern DC-to-DC Switchmode Power Converter Circuits*, 1985, Van Nostrand Reinhold Co., New York
- N.Mohan, T.M.Undeland, and W.P.Robbins, *Power Electronics: Converters, Applications, and Design*, 1995 (2nd Ed.), John Wiley & Sons, New York
- K.D.T.Ngo, *Topologies and Analysis in PWM Inversion, Rectification and Cycloconversion*, Ph.D. Dissertation, California Institute of Technology, Pasadena, CA, 1984

© 2007 Microchip Technology Incorporated. All Rights Reserved.

References

- L.H.Dixon, "Average current-mode control of switching power supplies," *Unitrode Power Supply Design Seminar Handbook*, 1991
- L.H.Dixon, "Control loop cookbook," *Unitrode Power Supply Design Seminar Handbook*, 1990
- R.P.Severns, G.Bloom, *Modern DC-to-DC Switchmode Power Converter Circuits*, 1985, Van Nostrand Reinhold Co., New York
- N.Mohan, T.M.Undeland, and W.P.Robbins, *Power Electronics: Converters, Applications, and Design*, 1995 (2nd Ed.), John Wiley & Sons, New York
- B. C. Kuo, *Automatic Control Systems*, 1991 (6th Ed.), Prentice-Hall, Inc., New Jersey

© 2007 Microchip Technology Incorporated. All Rights Reserved.

Trademarks

The Microchip name and logo, the Microchip logo, Accuron, dsPIC, KeeLoq, KeeLoq logo, microID, MPLAB, PIC, PICmicro, PICSTART, PRO MATE, rfPIC and SmartShunt are registered trademarks of Microchip Technology Incorporated in the U.S.A. and other countries.

AmpLab, FilterLab, Linear Active Thermistor, Migratable Memory, MXDEV, MXLAB, SEEVAL, SmartSensor and The Embedded Control Solutions Company are registered trademarks of Microchip Technology Incorporated in the U.S.A.

Analog-for-the-Digital Age, Application Maestro, CodeGuard, dsPICDEM, dsPICDEM.net, dsPICworks, ECAN, ECONOMONITOR, FanSense, FlexROM, fuzzyLAB, In-Circuit Serial Programming, ICSP, ICEPIC, Mindi, MiWi, MPASM, MPLAB Certified logo, MPLIB, MPLINK, PICkit, PICDEM, PICDEM.net, PICLAB, PICtail, PowerCal, PowerInfo, PowerMate, PowerTool, REAL ICE, rfLAB, Select Mode, Smart Serial, SmartTel, Total Endurance, UNI/O, WiperLock and ZENA are trademarks of Microchip Technology Incorporated in the U.S.A. and other countries.

SQTP is a service mark of Microchip Technology Incorporated in the U.S.A.

All other trademarks mentioned herein are property of their respective companies.

© 2007 Microchip Technology Incorporated. All Rights Reserved.