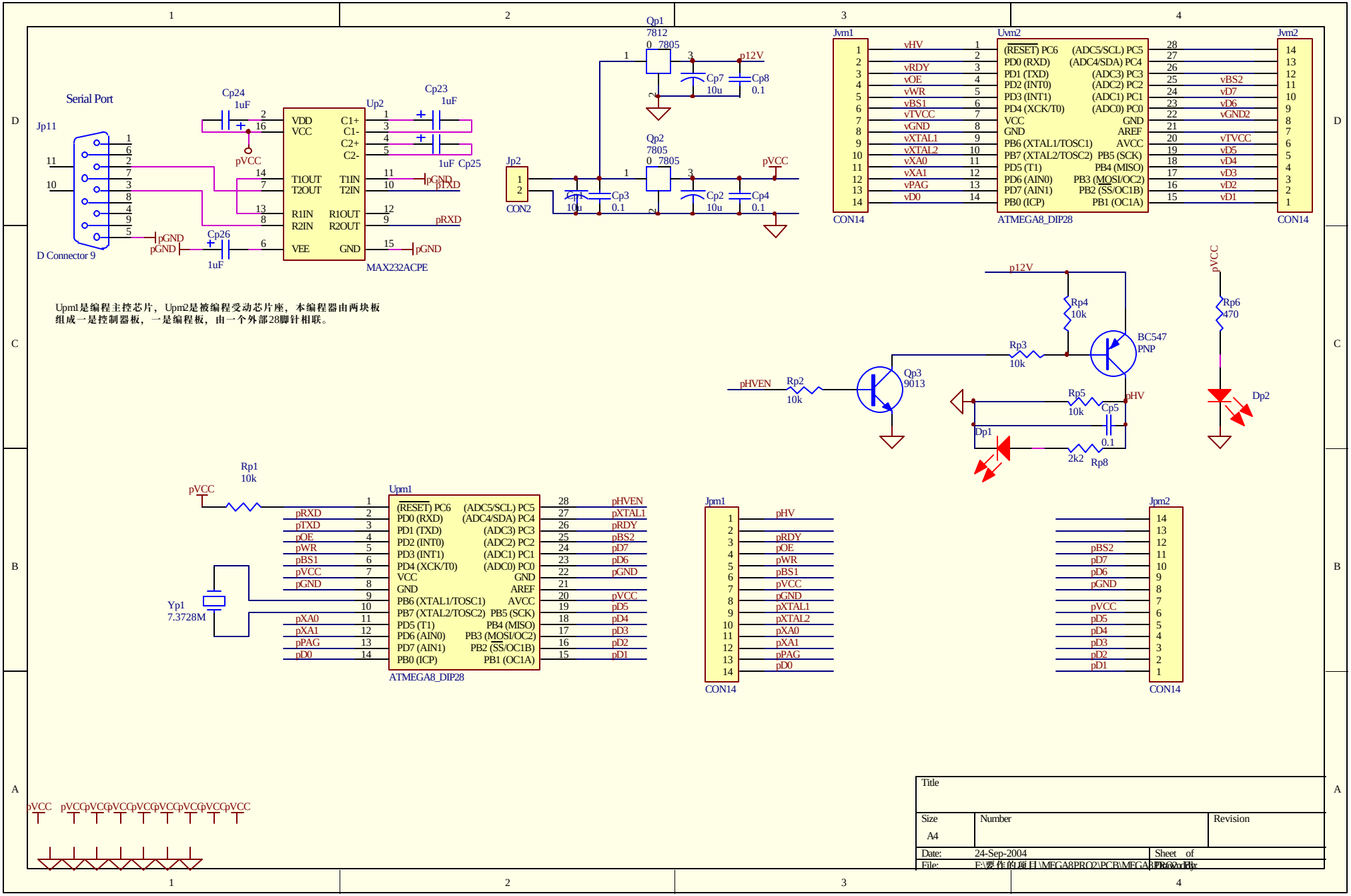
Serial Port
Jp11
D Connector 9
Cp24
1uF
Cp23
1uF
Cp25
1uF
Cp26
1uF
pVCC
pGND
Up2
VDD
VCC
C1+
C1-
C2+
C2-
T1OUT
T2OUT
T1IN
T2IN
R1IN
R2IN
R1OUT
R2OUT
VEE
GND
pTXD
pRXD
MAX232ACPE
Jp2
CON2
Cp1
10u
Cp3
0.1
Qp1
7812
Qp2
7805
Cp7
10u
Cp8
0.1
Cp2
10u
Cp4
0.1
p12V
Jvm1
CON14
Uvm2
ATMEGA8_DIP28
Jvm2
CON14
vHV
vRDY
vOE
vWR
vBS1
vTVCC
vGND
vXTAL1
vXTAL2
vXA0
vXA1
vPAG
vD0
vBS2
vD7
vD6
vGND2
vTVCC
vD5
vD4
vD3
vD2
vD1
Upm1 是编程主控芯片，Upm2是被编程受动芯片座，本编程器由两块板
组成一是控制器板，一是编程板，由一个外部28脚针相联。
Rp4
10k
Rp3
10k
BC547
PNP
Qp3
9013
pHVEN
Rp2
10k
Rp5
10k
Cp5
0.1
pHV
Dp1
2k2
Rp8
Rp6
470
Dp2
Rp1
10k
Yp1
7.3728M
Upm1
ATMEGA8_DIP28
pHVEN
pXTAL1
pRDY
pBS2
pD7
pD6
pGND
pVCC
pD5
pD4
pD3
pD2
pD1
Jpm1
CON14
Jpm2
CON14
Title
Size
A4
Number
Revision
Date:
24-Sep-2004
Sheet of
File: